Testing Evaluation Laboratories, Inc.
2002 Wood Court Suite 1 – Plant City, FL 33563
Phone: 813-754-9887

ASTM E 1886-05 / ASTM E 1996-09
Missile Level "D" (Includes Wind Zone 4)

TEST REPORT SUMMARY

Test Report Issued To:

Fleetwood Windows and Doors
1 Fleetwood Way
Corona, CA 92879

3900-T Side Hinged Doors

Title of Test	Results	
	Specimen 9a 108.00 x 168.00 O/OX - Outswing	Specimens 10a and 10b 108.00 x 168.00 O/OX - Outswing
Impact	Pass	Pass
Fatigue Load Cycling	+50.0/- 55.0 psf	+50.0/- 55.0 psf

Reference should be made to Report No. TEL 01991346 for complete test specimen description and data. For corresponding data regarding AAMA/WDMA/CSA 101/I.S./2/A440-08 and A440-11 *(A440S1-09)* reference should be made to Report No. TEL 01991344 and No. TEL 01991345.

For Testing Evaluation Laboratories, Inc.

Vivian K. Wright

Vivian K. Wright,
President

Testing Evaluation Laboratories, Inc.

2002 Wood Court Suite 1 – Plant City, FL 33563
Phone: 813-754-9887

TEST RESULTS

IAS Lab Certification Number: TL-299

Report No: TEL 01991346
Test Dates: March 16, 2015 through June 23, 2015
Report Date: June 26, 2015

Issued to:

Fleetwood Windows and Doors
1 Fleetwood Way
Corona, CA 92879

Project Summary: Testing Evaluation Laboratories, Inc. (TEL) was contracted by Fleetwood Windows and Doors to perform tests on the 3900-T Side Hinged Doors at TEL's Plant City, FL test facility.

Test specimen descriptions and results are reported herein.

Test Specifications: The test specimens were evaluated in accordance with the following:

ASTM E 1886-05 / ASTM E 1996-09
Missile Level "D" (Includes Wind Zone 4)

Test Specimen Description:

Series / Model:	**3900-T Side Hinged Doors**
Type:	**Aluminum Side Hinged Door with Sidelite and Transom – (O/OX)**
Overall Size:	**108.00" x 168.00" – All Specimens – (O/OX)**
Daylight Opening:	**36.00" x 109.00" – Door Panel— All Specimens** **55.25 " x 115.25" – Sidelite – All Specimens** **102.25" x 43.25" – Transom – All Specimens**
Glazing Details:	**See attached drawings for glazing details.**
Frame Material:	**Aluminum**
Finish:	**Mill Finish**

For Tested Elevation, Vertical Cross Sections, Horizontal Cross Sections, Components, Frame Anchoring, Glazing Detail and Bill of Materials See Attached Drawing numbers L-7346 and L-7351.

IMPACT AND CYCLING TESTS

Specimen 9a – 108.00" x 168.00" – Outswing Aluminum Side Hinged Door with Sidelite and Transom – (O/OX)

ASTM E1886-05/1996-09 – Large Missile Impact (2 x 4 Southern Yellow Pine)

Cond. Temp Of Specimen	Missile Level	Missile Weight	Missile Length	Muzzle Distance From Specimen
75°F	D	9.0 lbs, 0 oz.	8'-1/4"	17'0"

Impact Location	Results	X - Measurement	Y - Measurement	Speed
1	Pass	83.50"	60.00"	50.0 fps
2	Pass	71.50"	11.50"	50.1 fps
3	Pass	30.50"	61.00"	50.0 fps
4	Pass	9.00"	9.00"	49.9 fps
5	Pass	60.00"	59.50"	50.0 fps
6	Pass	54.00"	120.00"	50.1 fps

Orientation of Missile at Impact was within +/-5° of horizontal.
None of the impacts penetrated the specimens.
"X" measurement is from the left edge of test specimen.
"Y" measurement is from the bottom edge of test specimen.

ASTM E1886-05/1996-09 – Fatigue Load Cycling **Design Pressure +50.0 psf / - 55.0 psf**

Positive % of Test Load	Positive Pressure Range (psf)	Number Of Cycles	Average Cycle Time (Sec)
20% to 50%	10.0 to 25.0	3500	1.90
0% to 60%	0.0 to 30.0	300	2.89
50% to 80%	25.0 to 40.0	600	1.44
30% to 100%*	15.0 to 50.0	100	1.93

Negative % of Test Load	Negative Pressure Range (psf)	Number Of Cycles	Average Cycle Time (Sec)
30% to 100%*	16.5 to 55.0	50	2.70
50% to 80%	27.5 to 44.0	1050	1.41
0% to 60%	0.0 to 30.0	50	2.10
20% to 50%	11.0 to 27.5	3350	1.56

*Active Panel deflected 2.13" from original plane at 100% Positive load and 2.50" from original plane at 100% Negative load. At the completion of cycles the door panel was operable. There were no tears in the film. In our opinion, the tape and film used to seal for air leakage did not influence the results of the test.

James Hayhurst, Test Technician

IMPACT AND CYCLING TESTS

Specimen 10a – 108.00" x 168.00" – Outswing Aluminum Side Hinged Door with Sidelite and Transom – (O/OX)

ASTM E1886-05/1996-09 – Large Missile Impact (2 x 4 Southern Yellow Pine)

Cond. Temp Of Specimen	Missile Level	Missile Weight	Missile Length	Muzzle Distance From Specimen
75°F	D	9.0 lbs, 1 oz.	8'-1/4"	17'0"

Impact Location	Results	X - Measurement	Y - Measurement	Speed
1	Pass	31.00"	61.00"	50.1 fps
2	Pass	52.00"	9.00"	50.0 fps
3	Pass	60.00"	60.00"	50.0 fps
4	Pass	83.50"	60.00"	50.1 fps
5	Pass	96.50"	11.50"	50.1 fps
6	Pass	54.25"	119.75"	49.9 fps

Orientation of Missile at Impact was within +/-5° of horizontal.
None of the impacts penetrated the specimens.
"X" measurement is from the left edge of test specimen.
"Y" measurement is from the bottom edge of test specimen.

ASTM E1886-05/1996-09 – Fatigue Load Cycling **Design Pressure +50.0 psf / - 55.0 psf**

Positive % of Test Load	Positive Pressure Range (psf)	Number Of Cycles	Average Cycle Time (Sec)
20% to 50%	10.0 to 25.0	3500	1.80
0% to 60%	0.0 to 30.0	300	2.89
50% to 80%	25.0 to 40.0	600	1.44
30% to 100%*	15.0 to 50.0	100	1.93

Negative % of Test Load	Negative Pressure Range (psf)	Number Of Cycles	Average Cycle Time (Sec)
30% to 100%*	16.5 to 55.0	50	2.70
50% to 80%	27.5 to 44.0	1050	1.41
0% to 60%	0.0 to 30.0	50	2.10
20% to 50%	11.0 to 27.5	3350	1.56

*Active Panel deflected 2.75" from original plane at 100% Positive load and 3.25" from original plane at 100% Negative load. At the completion of cycles the door panel was operable. There were no tears in the film. In our opinion, the tape and film used to seal for air leakage did not influence the results of the test.

James Hayhurst, Test Technician

IMPACT AND CYCLING TESTS

Specimen 10b – 108.00" x 168.00" – Outswing Aluminum Side Hinged Door with Sidelite and Transom – (O/OX)

ASTM E1886-05/1996-09 – Large Missile Impact (2 x 4 Southern Yellow Pine)

Cond. Temp Of Specimen	Missile Level	Missile Weight	Missile Length	Muzzle Distance From Specimen
75°F	D	9.0 lbs, 1 oz.	8'-1/4"	17'0"

Impact Location	Results	X - Measurement	Y - Measurement	Speed
1	Pass	9.00"	112.00"	50.0 fps
2	Pass	31.00"	60.25"	49.9 fps
3	Pass	83.25"	60.12"	50.0 fps
4	Pass	95.25 "	11.25"	50.0 fps

Orientation of Missile at Impact was within +/-5° of horizontal.
None of the impacts penetrated the specimens.
"X" measurement is from the left edge of test specimen.
"Y" measurement is from the bottom edge of test specimen.

ASTM E1886-05/1996-09 – Fatigue Load Cycling **Design Pressure +50.0 psf / - 55.0 psf**

Positive % of Test Load	Positive Pressure Range (psf)	Number Of Cycles	Average Cycle Time (Sec)
20% to 50%	10.0 to 25.0	3500	1.91
0% to 60%	0.0 to 30.0	300	2.81
50% to 80%	25.0 to 40.0	600	1.52
30% to 100%*	15.0 to 50.0	100	2.01

Negative % of Test Load	Negative Pressure Range (psf)	Number Of Cycles	Average Cycle Time (Sec)
30% to 100%*	16.5 to 55.0	50	2.12
50% to 80%	27.5 to 44.0	1050	1.52
0% to 60%	0.0 to 30.0	50	2.17
20% to 50%	11.0 to 27.5	3350	1.69

*Active Panel deflected 2.75" from original plane at 100% Positive load and 3.12" from original plane at 100% Negative load. At the completion of cycles the door panel was operable. There were no tears in the film. In our opinion, the tape and film used to seal for air leakage did not influence the results of the test.

James Hayhurst, Test Technician

Conditions, Terms, and General Notes Regarding These Tests

The product tested **Has Been** compared to the detailed drawing, bill of materials and fabrication information supplied by the client so named herein. Our analysis, which includes dimensional and component description comparisons, indicate the tested product and engineering information supplied by the client **"Are Equivalent".** The report and representative samples will be retained for four years from the date of initial test.

These test results were obtained by employing all requirements of the designated test methods with no Deviations unless explicitly noted in test report. The test results and specimen supplied for testing are in compliance with the reference.

The test results are specific to the product tested by this laboratory and of the sample supplied by the client named herein, and they relate to no other product either manufactured by the client, a fabricator of the client or of the client or of installed field performance.

This test report does not constitute certification of this product, but only that the above test results were obtained using the designated test methods and they indicate compliance with the performance requirements (paragraphs as listed) of the above referenced specifications.

Testing Evaluation Laboratories, Inc. makes no opinions or endorsements regarding this product and its performance. This report may not be reproduced or quoted in partial form without the expressed written approval of Testing Evaluation Laboratories, Inc.

Testing Evaluation Laboratories, Inc.'s letter, reports, its name or insignia or mark are for the exclusive use of the client so named herein and any other use is strictly prohibited. The report, letters and the name of Testing Evaluation Laboratories, Inc., its seal or mark shall not be used in any circumstance to the general public or in any advertising.

Limitation of liability: Due diligence was used in performing the tests and reporting the results. By acceptance of this report, this client agrees to hold harmless and indemnify Testing Evaluation Laboratories, Inc., its employees, sub-contractors, officers and owners against all claims and demands of any kind whatsoever, which arise out of or in any manner connected with the performance of work referred to herein.

Testing Evaluation Laboratories, Inc.

Vivian K. Wright

Vivian K. Wright,
President

Revision Log

Rev No.	Date	Page(s)	Revision(s)
0	6/26/2015	NA	Original Report Issue

TABLE OF CONTENTS

SHEET #	DESCRIPTION
1	Table of contents
2	Test elevation
3	Horizontal cross sections
4	Horizontal cross sections
5	Horizontal cross sections
6	Vertical cross sections
7	Vertical cross sections
8	Vertical cross sections
9	Vertical cross sections
10	Vertical cross sections
11	Frame anchoring
12	Components and glazing details
13	Components
14	Bill of materials

Testing Evaluation Laboratories Inc.
Specimen Complies with Drawing
Deviations Noted - TEL# 01991346
Date 6/26/2015 Verified by gw

PRODUCT: FLEETWOOD SPEC. #10, 10A, 10B, 10C

PART OR ASSEMBLY: TABLE OF CONTENTS

NO.	DATE	BY

REVISIONS

RW BUILDING CONSULTANTS, INC.
813.659.9197

DATE: 3/17/15
SCALE: N.T.S.
DWG. BY: JK
CHK. BY: LFS
DRAWING NO.: L-7351
SHEET 1 OF 14

© 2015 R.W. BUILDING CONSULTANTS INC.

R:\Clients\Fleetwood PERMANENT\Drawings\Lab Dwgs\L-7351..dwg

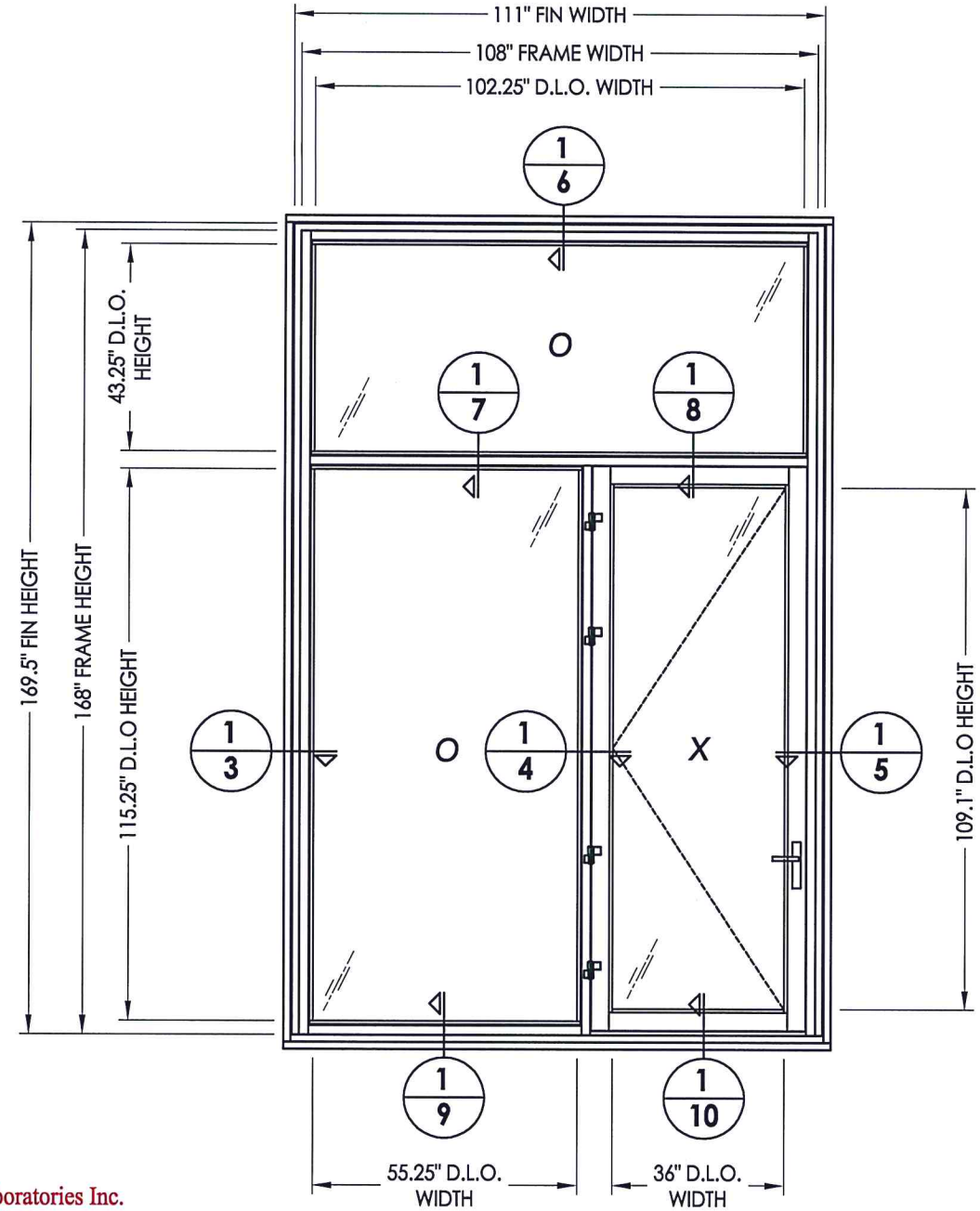

Testing Evaluation Laboratories Inc.
Specimen Complies with Drawing
Deviations Noted - TEL# 01991346
Date 6/26/2015 Verified by gw

PRODUCT: FLEETWOOD SPEC. #10, 10A, 10B, 10C

PART OR ASSEMBLY: TEST ELEVATIONS

NO.	DATE	BY

REVISIONS

RW BUILDING CONSULTANTS, INC.
813.659.9197

DATE: 3/17/15
SCALE: N.T.S.
DWG. BY: JK
CHK. BY: LFS
DRAWING NO.: L-7351
SHEET 2 OF 14

R:\Clients\Fleetwood PERMANENT\Drawings\Lab Dwgs\L-7351..dwg

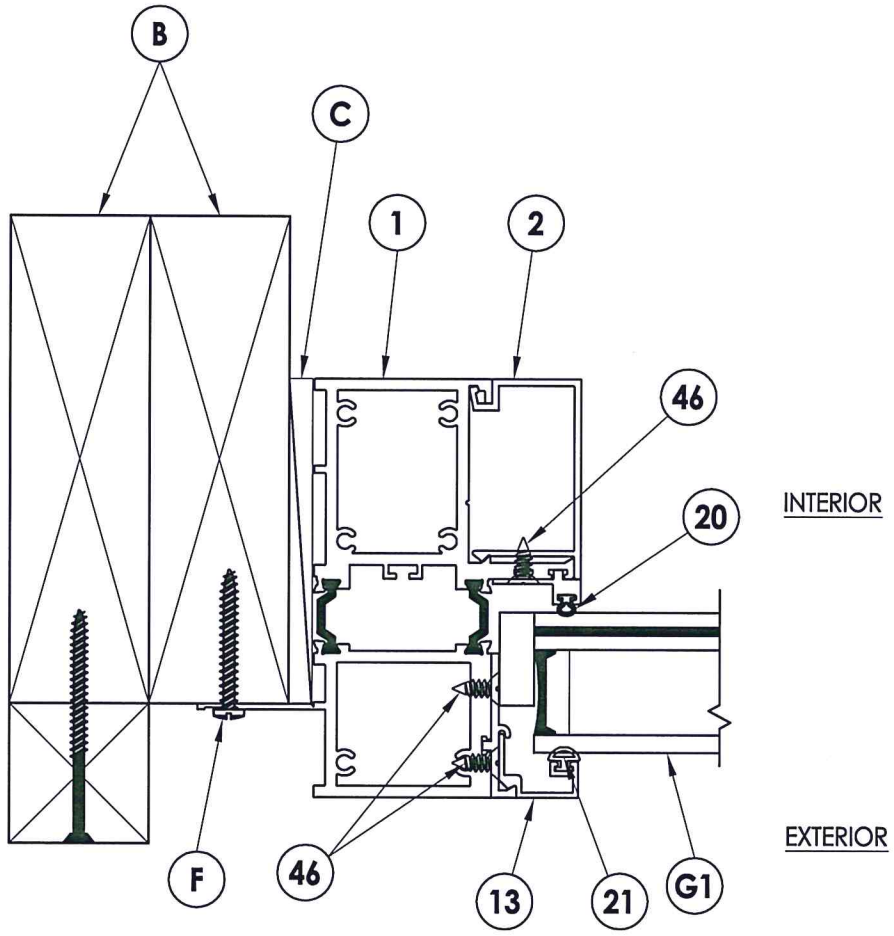

1/3 **HORIZONTAL CROSS SECTION**

Testing Evaluation Laboratories Inc.
Specimen Complies with Drawing
Deviations Noted - TEL# 01991346
Date 6/26/2015 Verified by gw

PRODUCT: FLEETWOOD SPEC. #10, 10A, 10B, 10C

PART OR ASSEMBLY: HORIZONTAL CROSS SECTIONS

NO.	DATE	REVISIONS	BY

RW BUILDING CONSULTANTS, INC.
813.659.9197

DATE: 3/17/15
SCALE: N.T.S.
DWG. BY: JK
CHK. BY: LFS
DRAWING NO.: L-7351
SHEET 3 OF 14

© 2015 R.W. BUILDING CONSULTANTS INC.

R:\Clients\Fleetwood PERMANENT\Drawings\Lab Dwgs\L-7351..dwg

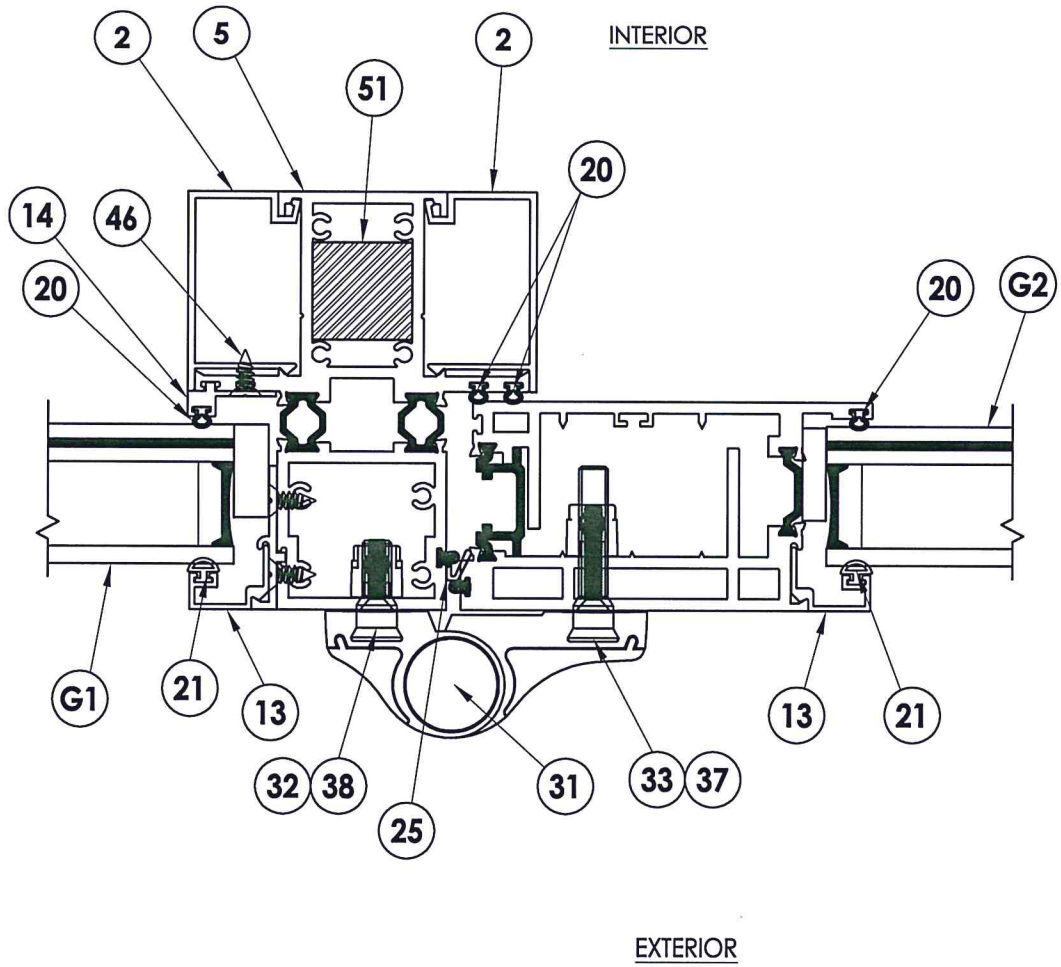

Testing Evaluation Laboratories Inc.
Specimen Complies with Drawing
Deviations Noted - TEL# 01991346
Date 6/26/2015 Verified by gw

1/4 HORIZONTAL CROSS SECTION

PRODUCT: FLEETWOOD SPEC. #10, 10A, 10B, 10C

PART OR ASSEMBLY: HORIZONTAL CROSS SECTIONS

NO.	DATE	BY

REVISIONS

RW BUILDING CONSULTANTS, INC.
813.659.9197

DATE: 3/17/15
SCALE: N.T.S.
DWG. BY: JK
CHK. BY: LFS
DRAWING NO.: L-7351
SHEET 4 OF 14

© 2015 R.W. BUILDING CONSULTANTS INC.

R:\Clients\Fleetwood PERMANENT\Drawings\Lab Dwgs\L-7351..dwg

Testing Evaluation Laboratories Inc.
Specimen Complies with Drawing
Deviations Noted - TEL# 01991346
Date 6/26/2015 Verified by gw

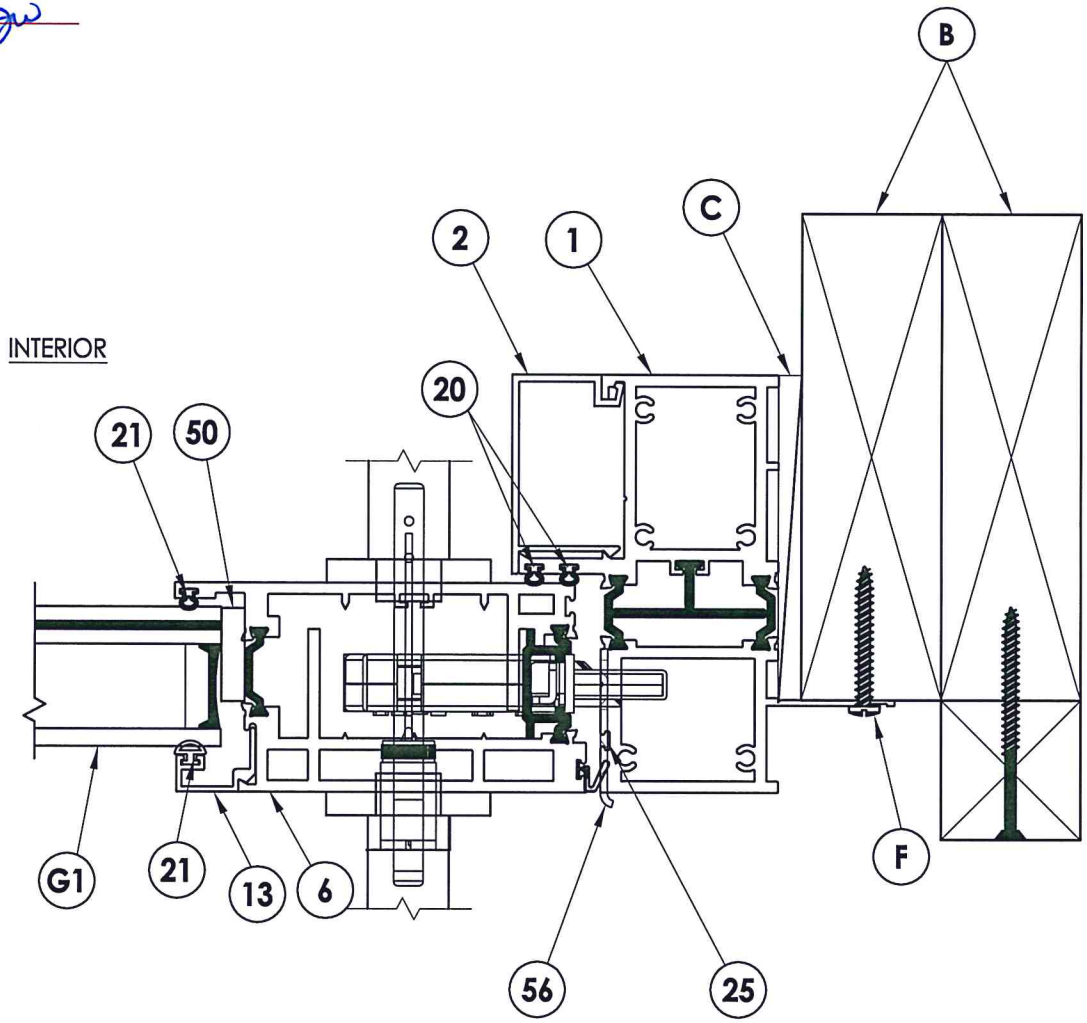

1/5 HORIZONTAL CROSS SECTION

PRODUCT: FLEETWOOD SPEC. #10, 10A, 10B, 10C

PART OR ASSEMBLY: HORIZONTAL CROSS SECTIONS

NO.	DATE	REVISIONS	BY

RW BUILDING CONSULTANTS, INC.
813.659.9197

DATE: 3/17/15
SCALE: N.T.S.
DWG. BY: JK
CHK. BY: LFS
DRAWING NO.: L-7351
SHEET 5 OF 14

© 2015 R.W. BUILDING CONSULTANTS INC.

R:\Clients\Fleetwood PERMANENT\Drawings\Lab Dwgs\L-7351..dwg

Testing Evaluation Laboratories Inc.
Specimen Complies with Drawing
Deviations Noted - TEL# 01991346
Date 6/26/2015 Verified by gw

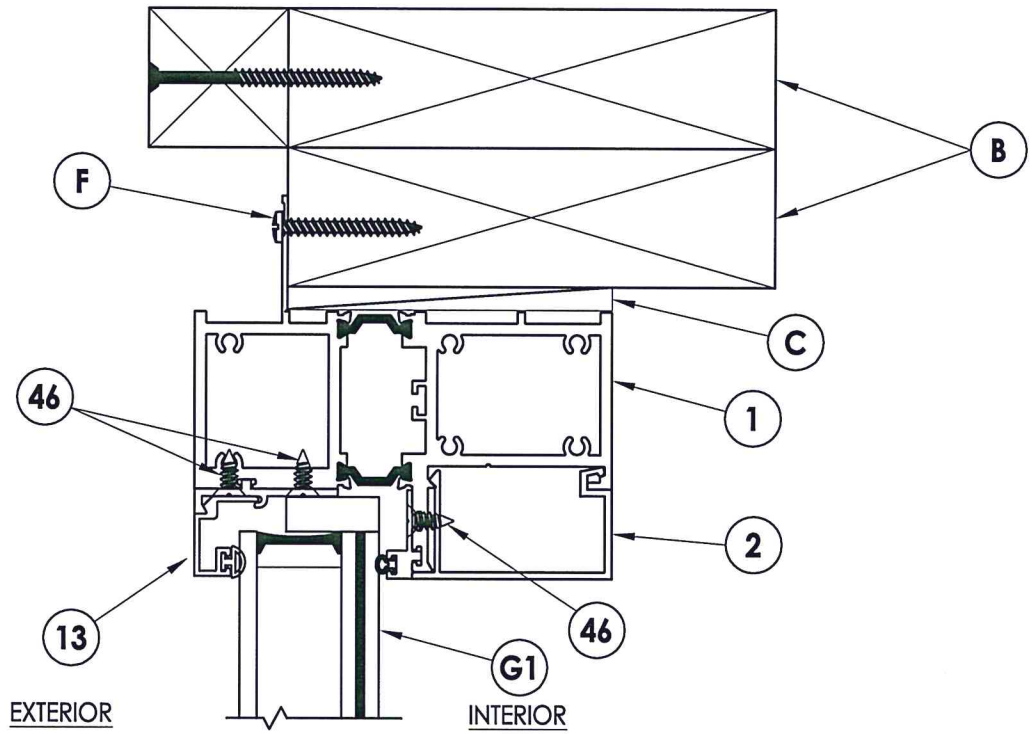

1/6 VERTICAL CROSS SECTION

PRODUCT: FLEETWOOD SPEC. #10, 10A, 10B, 10C

PART OR ASSEMBLY: VERTICAL CROSS SECTIONS

NO.	DATE	REVISIONS	BY

RW BUILDING CONSULTANTS, INC.
813.659.9197

DATE: 3/17/15
SCALE: N.T.S.
DWG. BY: JK
CHK. BY: LFS
DRAWING NO.: L-7351
SHEET 6 OF 14

R:\Clients\Fleetwood PERMANENT\Drawings\Lab Dwgs\L-7351..dwg

© 2015 R.W. BUILDING CONSULTANTS INC.

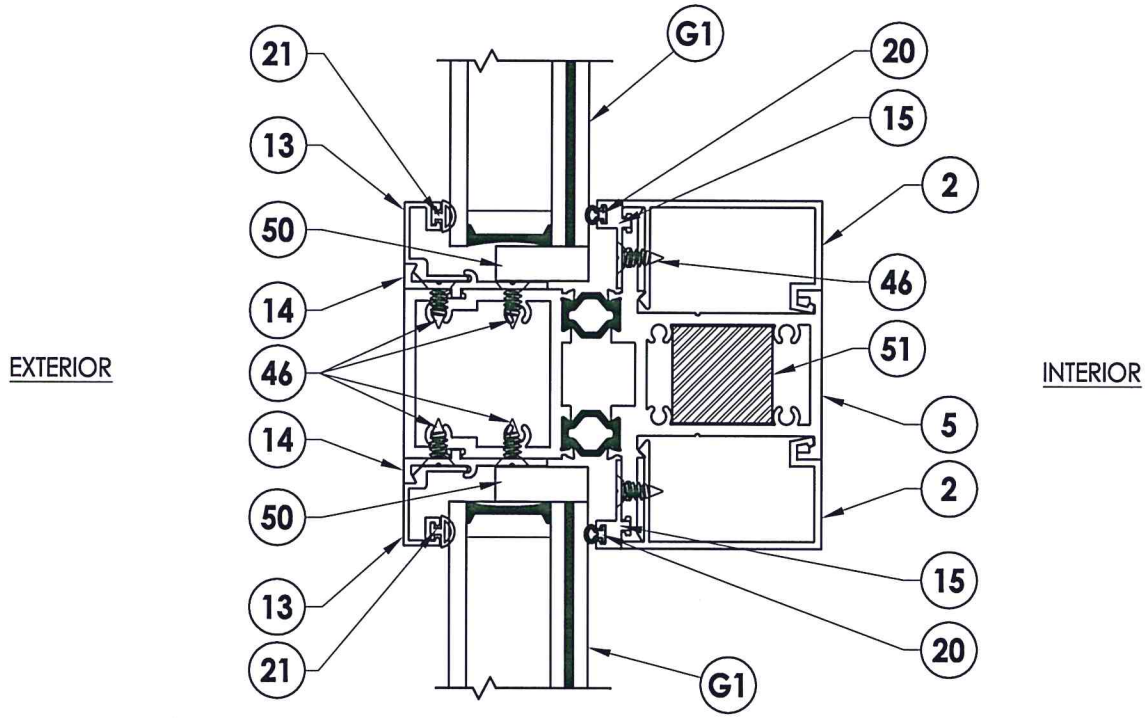

1/7 VERTICAL CROSS SECTION

Testing Evaluation Laboratories Inc.
Specimen Complies with Drawing
Deviations Noted - TEL# 01991346
Date 6/26/2015 Verified by gw

PRODUCT: FLEETWOOD SPEC. #10, 10A, 10B, 10C

PART OR ASSEMBLY: VERTICAL CROSS SECTIONS

NO.	DATE	REVISIONS	BY

RW BUILDING CONSULTANTS, INC.
813.659.9197

DATE: 3/17/15
SCALE: N.T.S.
DWG. BY: JK
CHK. BY: LFS
DRAWING NO.: L-7351
SHEET 7 OF 14

© 2015 R.W. BUILDING CONSULTANTS INC.

R:\Clients\Fleetwood PERMANENT\Drawings\Lab Dwgs\L-7351..dwg

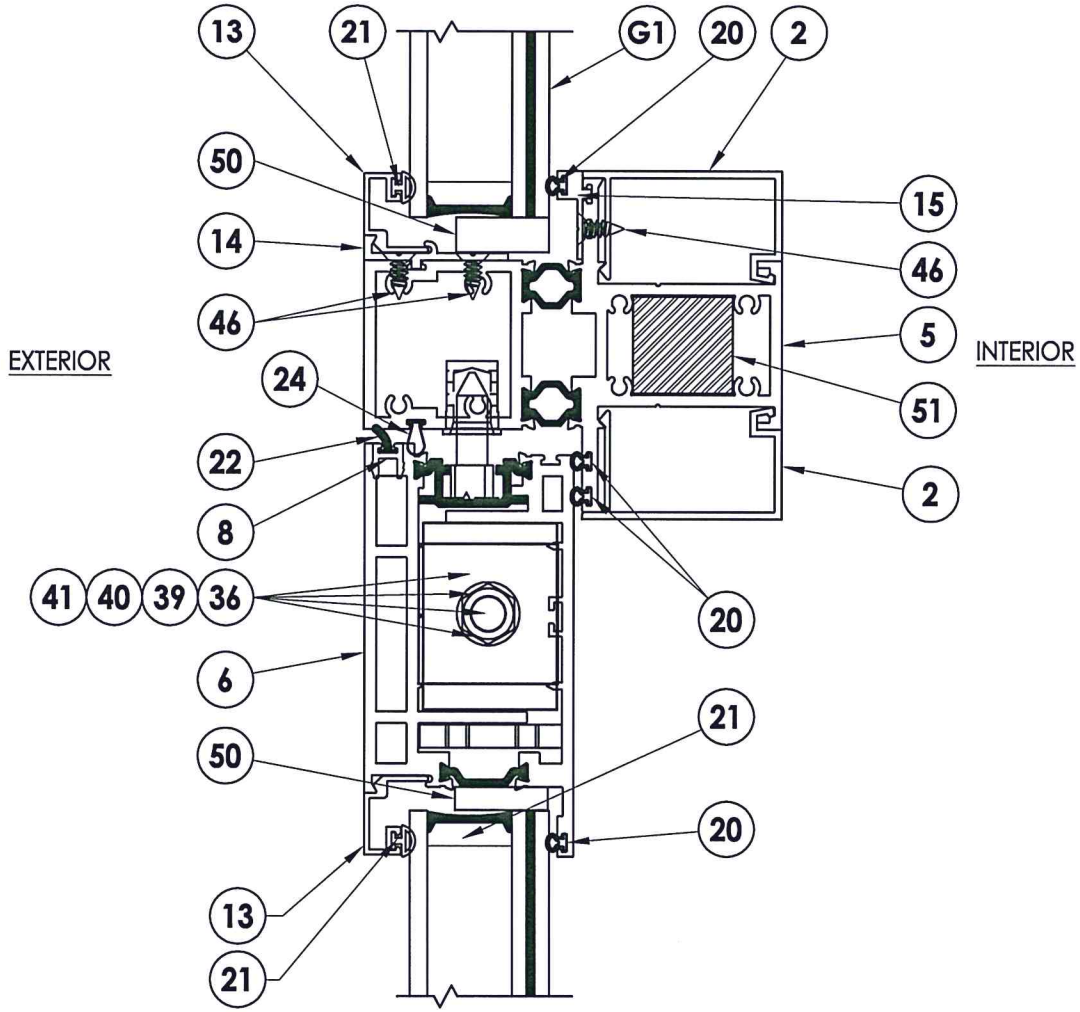

Testing Evaluation Laboratories Inc.
Specimen Complies with Drawing
Deviations Noted - TEL# 01991346
Date 6/26/2015 Verified by

1/8 **VERTICAL CROSS SECTION**

PRODUCT: FLEETWOOD SPEC. #10, 10A, 10B, 10C

PART OR ASSEMBLY: VERTICAL CROSS SECTIONS

NO.	DATE	BY

REVISIONS

RW BUILDING CONSULTANTS, INC.
813.659.9197

DATE: 3/17/15
SCALE: N.T.S.
DWG. BY: JK
CHK. BY: LFS
DRAWING NO.: L-7351
SHEET 8 OF 14

R:\Clients\Fleetwood PERMANENT\Drawings\Lab Dwgs\L-7351..dwg

© 2015 R.W. BUILDING CONSULTANTS INC.

Testing Evaluation Laboratories Inc.
Specimen Complies with Drawing
Deviations Noted - TEL# 01991346
Date 6/26/2015 Verified by gw

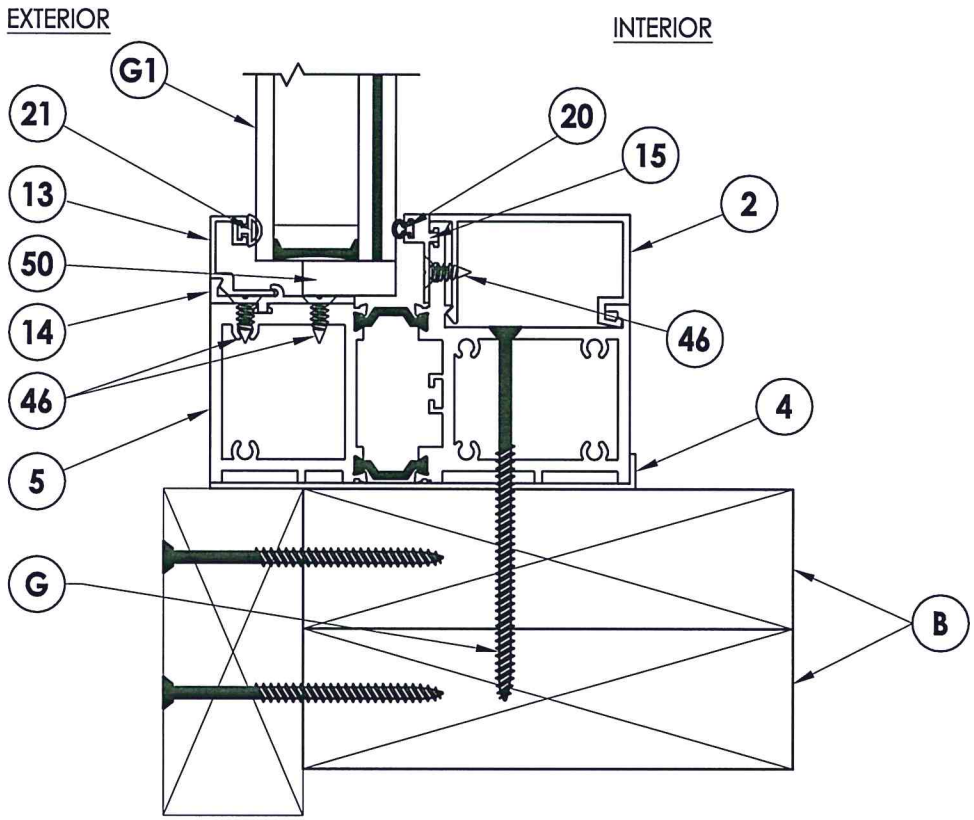

1/9 VERTICAL CROSS SECTION

PRODUCT: FLEETWOOD SPEC. #10, 10A, 10B, 10C

PART OR ASSEMBLY: VERTICAL CROSS SECTIONS

NO.	DATE	REVISIONS	BY

RW BUILDING CONSULTANTS, INC.
813.659.9197

DATE: 3/17/15
SCALE: N.T.S.
DWG. BY: JK
CHK. BY: LFS
DRAWING NO.: L-7351
SHEET 9 OF 14

R:\Clients\Fleetwood PERMANENT\Drawings\Lab Dwgs\L-7351..dwg

© 2015 R.W. BUILDING CONSULTANTS INC.

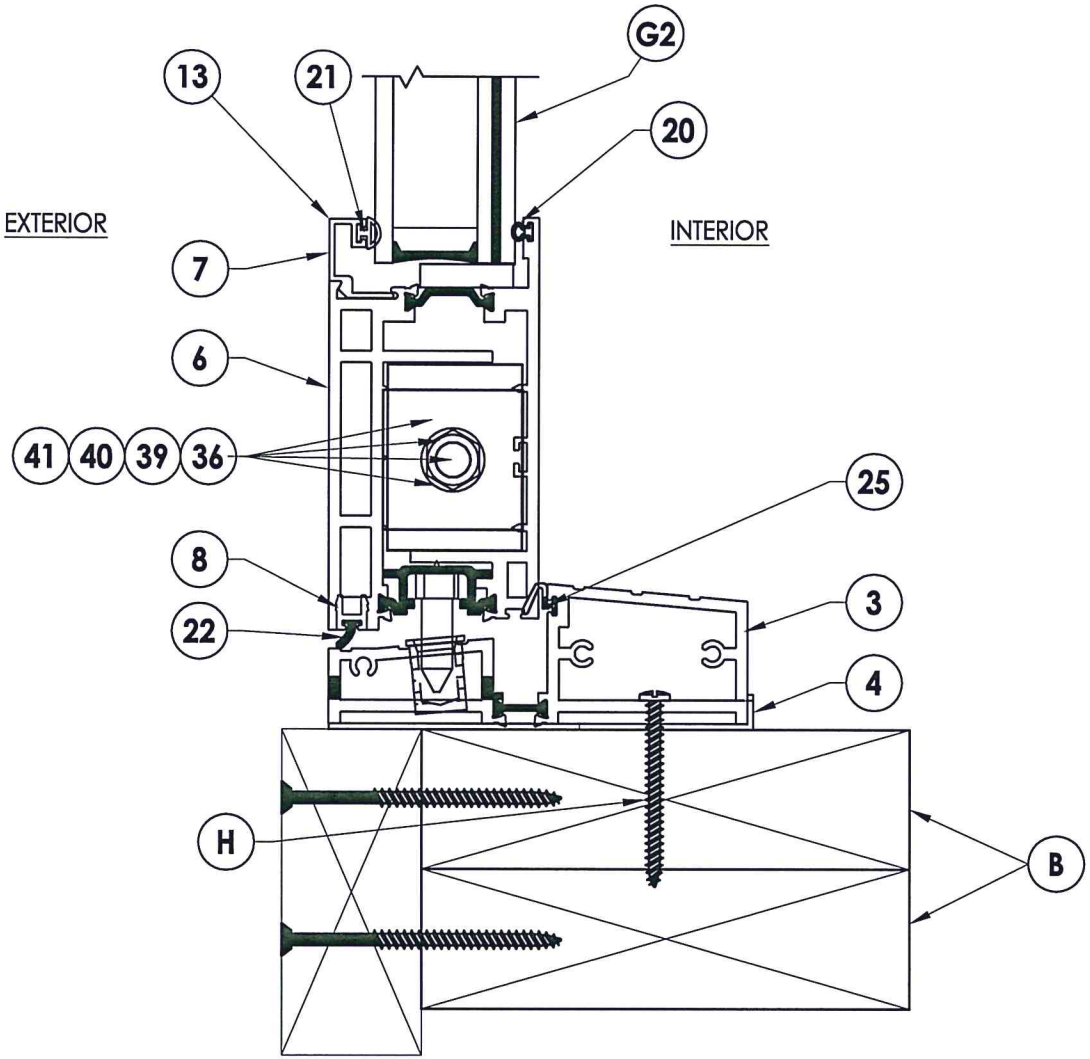

Testing Evaluation Laboratories Inc.
Specimen Complies with Drawing
Deviations Noted - TEL# 01991346
Date 6/26/2015 Verified by

1/10 **VERTICAL CROSS SECTION**

PRODUCT: FLEETWOOD SPEC. #10, 10A, 10B, 10C

PART OR ASSEMBLY: VERTICAL CROSS SECTIONS

NO.	DATE	REVISIONS	BY

RW BUILDING CONSULTANTS, INC.
813.659.9197

DATE: 3/17/15
SCALE: N.T.S.
DWG. BY: JK
CHK. BY: LFS
DRAWING NO.: L-7351
SHEET 10 OF 14

© 2015 R.W. BUILDING CONSULTANTS INC.

R:\Clients\Fleetwood PERMANENT\Drawings\Lab Dwgs\L-7351..dwg

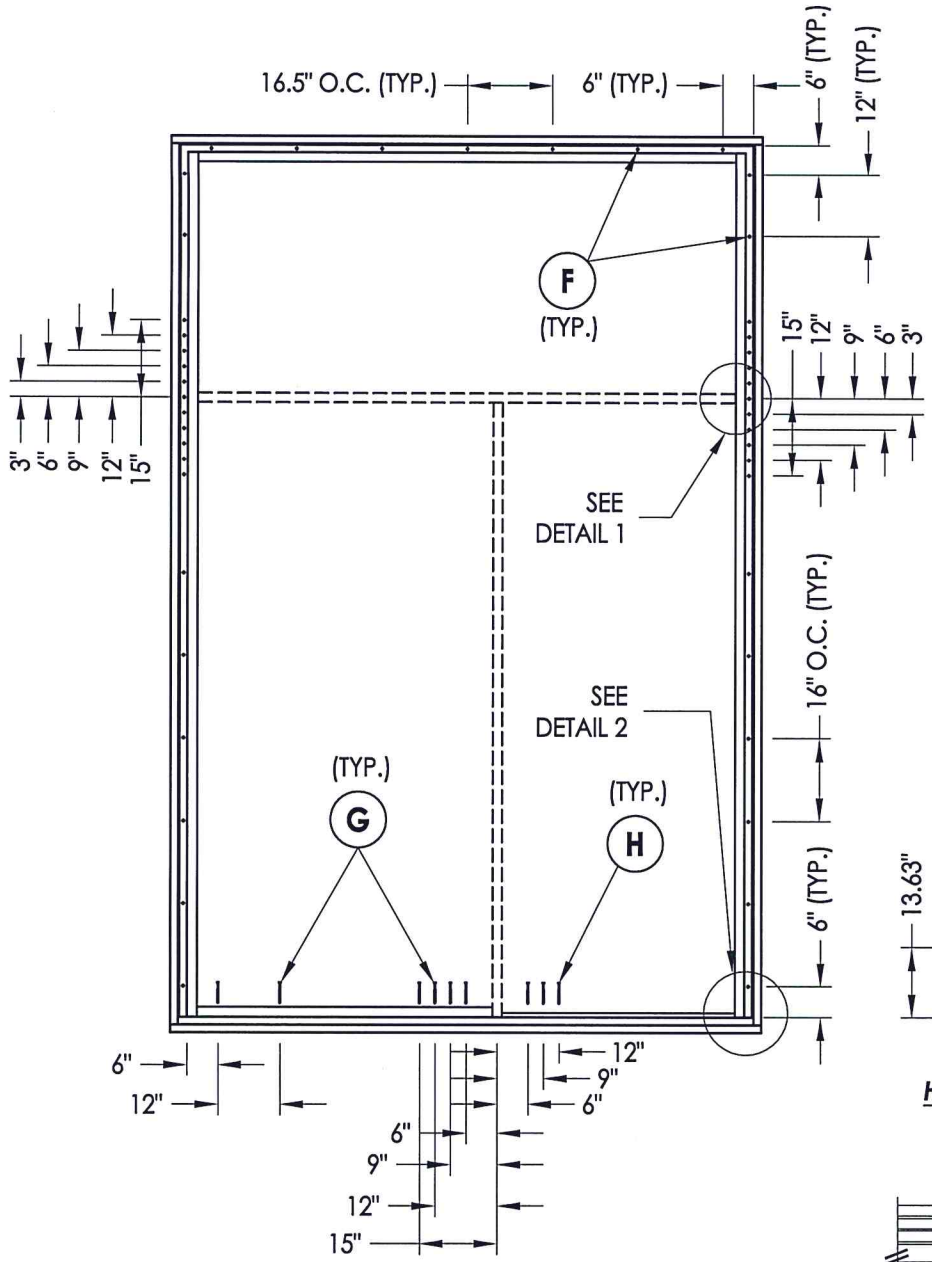

FRAME ANCHORING
(2X buck installation)

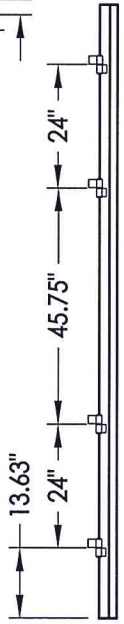

HINGE DETAIL

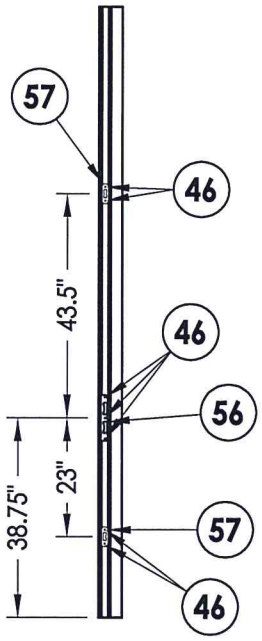

STRIKE DETAIL

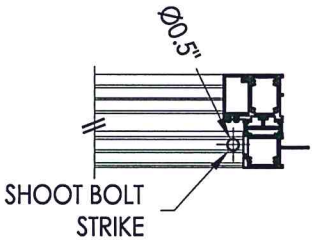

DETAIL 2

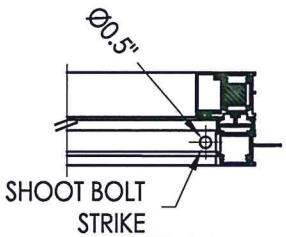

DETAIL 1

Testing Evaluation Laboratories Inc.
Specimen Complies with Drawing
Deviations Noted - TEL# 01991346
Date 6/26/2015 Verified by

PRODUCT: FLEETWOOD SPEC. #10, 10A, 10B, 10C

PART OR ASSEMBLY: TEST ELEVATIONS

NO.	DATE	BY

REVISIONS

RW BUILDING CONSULTANTS, INC.
813.659.9197

DATE: 3/17/15
SCALE: N.T.S.
DWG. BY: JK
CHK. BY: LFS
DRAWING NO.: L-7351
SHEET 11 OF 14

R:\Clients\Fleetwood PERMANENT\Drawings\Lab Dwgs\L-7351..dwg

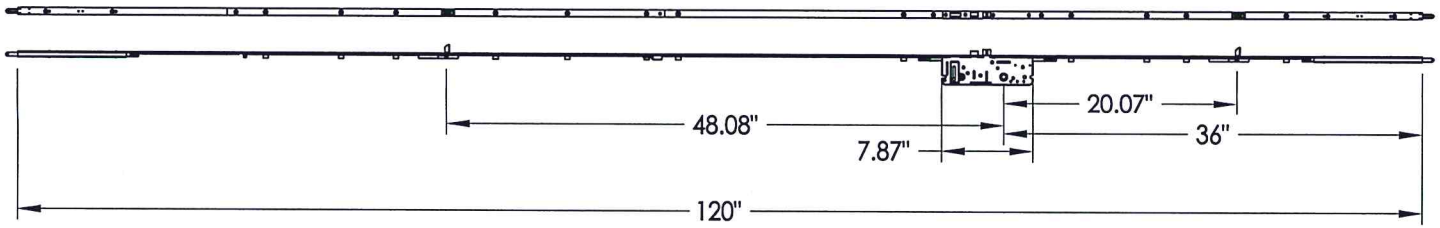

30 MULTI-POINT LOCK
TRUTH

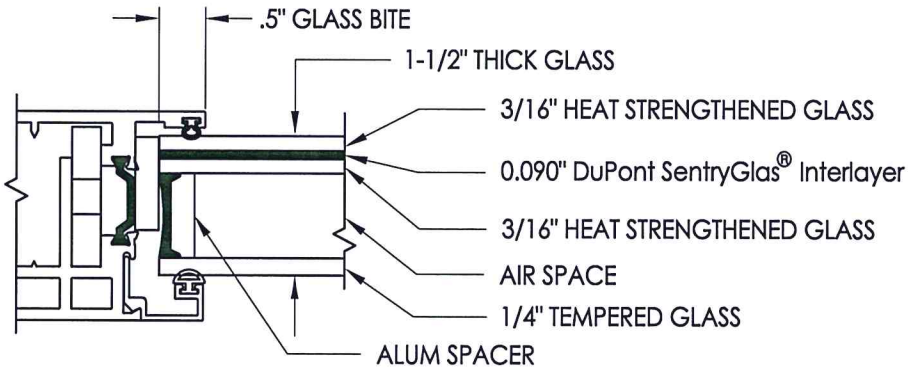

G2 GLAZING DETAIL

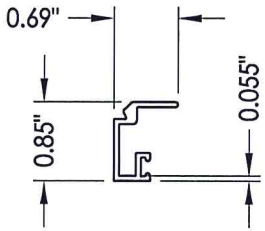

13 1.5" GLASS STOP

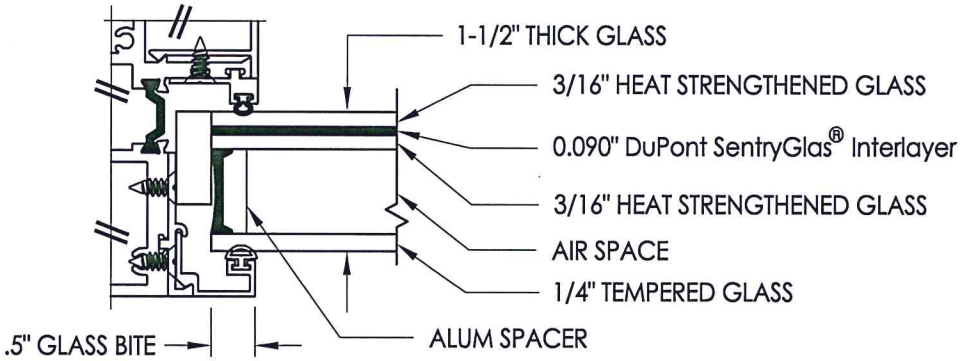

G1 GLAZING DETAIL

Testing Evaluation Laboratories Inc.
Specimen Complies with Drawing
Deviations Noted - TEL# 01991346
Date 6/26/2015 Verified by gw

PRODUCT: FLEETWOOD SPEC. #10, 10A, 10B, 10C

PART OR ASSEMBLY: COMPONENTS AND GLAZING DETAIL

NO.	DATE	REVISIONS	BY

RW BUILDING CONSULTANTS, INC.
813.659.9197

DATE: 3/17/15
SCALE: N.T.S.
DWG. BY: JK
CHK. BY: LFS
DRAWING NO.: L-7351
SHEET 12 OF 14

© 2015 R.W. BUILDING CONSULTANTS INC.

R:\Clients\Fleetwood PERMANENT\Drawings\Lab Dwgs\L-7351..dwg

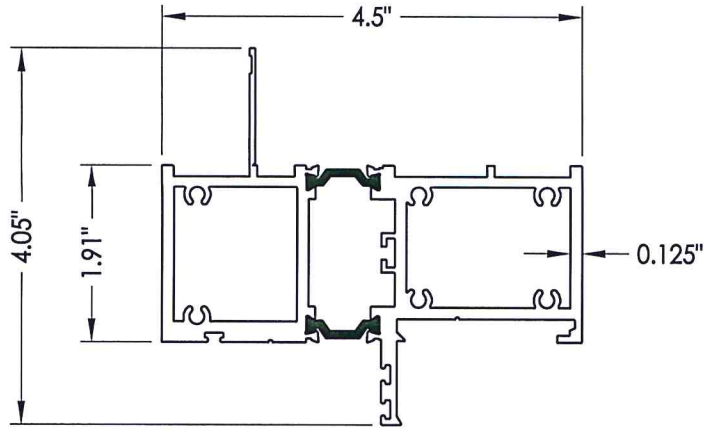

1 BLOCK HEAD & JAMBS

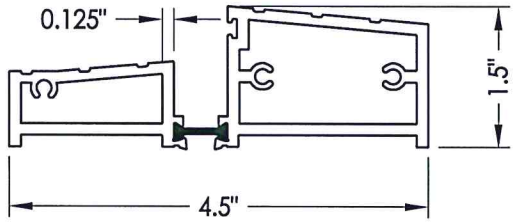

3 OUT-SWING SILL

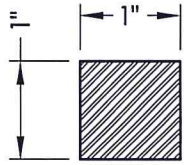

51 REINFORCEMENT

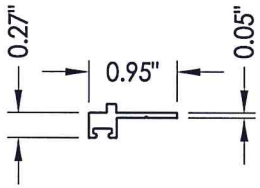

14 FIXED ADAPTOR

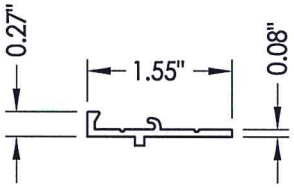

15 GLASS STOP ADAPTOR

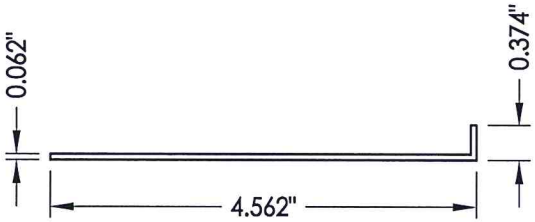

4 SILL PAN

Testing Evaluation Laboratories Inc.
Specimen Complies with Drawing
Deviations Noted - TEL# 01991346
Date 6/26/2015 Verified by gw

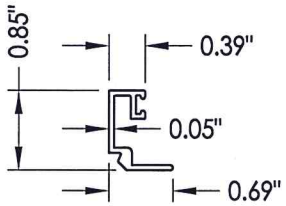

13 1-1/2" GLASS STOP

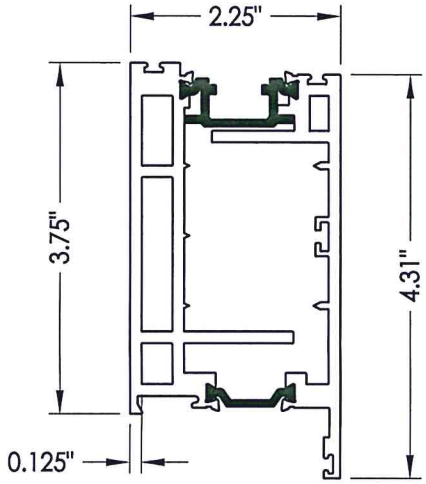

6 SASH

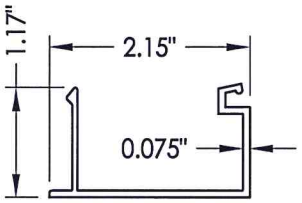

2 FRAME SNAP-IN

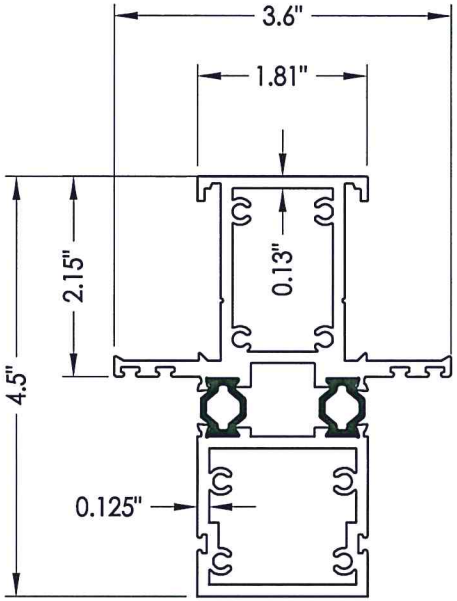

5 FRAME TEE BAR

PRODUCT: FLEETWOOD SPEC. #10, 10A, 10B, 10C

PART OR ASSEMBLY: COMPONENTS

NO.	DATE	REVISIONS	BY

RW BUILDING CONSULTANTS, INC.
813.659.9197

DATE: 3/17/15
SCALE: N.T.S.
DWG. BY: JK
CHK. BY: LFS
DRAWING NO.: L-7351
SHEET 13 OF 14

R:\Clients\Fleetwood PERMANENT\Drawings\Lab Dwgs\L-7351..dwg

© 2015 R.W. BUILDING CONSULTANTS INC.

BILL OF MATERIALS

ITEM #	DESCRIPTION	PART#	MATERIAL
B	2X BUCK SG >= 0.55	-	WOOD
C	1/4" MAX. SHIM SPACE	-	-
D	#10 x 2-3/4" PFH WOOD SCREW	-	STEEL
F	#10 x 1-1/2" PFH WOOD SCREW	-	STEEL
G	1/4" x 4" PFH ITW CONCRETE SCREW	-	STEEL
H	#10 x 2" PFH WOOD SCREW	-	STEEL
1	FRAME	3911	6063-T6 ALUM
2	FRAME SNAP-IN	3912	6063-T6 ALUM
3	OUT-SWING SILL	3202	6063-T6 ALUM
4	SILL PAN	-	SHEET METAL (ALUMINUM)
5	FRAME TEE BAR	3913	6063-T6 ALUM
6	SASH	3902	6063-T6 ALUM
8	ATLANTIC SEAL CLIP	3916	6063-T6 ALUM
9	CORNER BLOCK (CUT FROM 3906)	25167	6063-T6 ALUM
13	1-1/2" GLASS STOP	3908	6063-T6 ALUM
14	ATLANTIC NARROW FIXED ADAPTOR	3915	6063-T6 ALUM
15	ATLANTIC NARROW FIXED GLASS STOP ADAPTOR	3917	6063-T6 ALUM
20	BULB VINYL - MINI (EPDM 70 Durometer)	25199	TREMCO, # TX20801E
21	BULB VINYL - LARGE (EPDM 70 Durometer)	25031	TREMCO, # TX19638E
22	FOAM SEAL	25196	EMESBURY, # 32390
23	Q-LON FOAM SEAL	25189	SCHLEGEL CORP., # Q225T190
24	Q-LON FOAM SEAL	25058	SCHLEGEL CORP., # Q375T190
25	Q-LON FOAM SEAL	25059	SCHLEGEL CORP., # QEZ 376
30	LOCKING HARDWARE (5 point lock)	-	TRUTH
31	BUTT HINGE	-	SAVIO
32	BACK UP KIT	20535	SAVIO
33	HINGE BOLT, 8M X 48MM (FOR PANEL)	25026	SAVIO
36	BACK UP PLATE FOR CORNER BLOCK	25025	-
37	MACHINE SCREW NO 10-32, FHP 1.125"	25074	STAINLESS STEEL
38	MACHINE SCREW NO 10-32, FHP .75"	25073	STAINLESS STEEL
39	HEX HEAD CAP SCREW .375-16, 2.250"	25175	STAINLESS STEEL
40	.375-16 SS. HEX NUT	25023	STAINLESS STEEL
41	.375 SPLIT LOCK WASHER	25024	STAINLESS STEEL
42	.375-16 SS. HEX NUT	25176	STAINLESS STEEL
46	SCREW NO 10, UFHP .5"	20275	STAINLESS STEEL
50	4" LONG SETTING BLOCK	18620	-
51	REINFORCEMENT (1" X 1")	-	6061-T6 ALUM
56	LATCH AND DEADBOLT STRIKE PLATE	-	STAINLESS STEEL
57	STRIKE PLATE	-	STAINLESS STEEL

Testing Evaluation Laboratories Inc.
Specimen Complies with Drawing
Deviations Noted - TEL# 01991346
Date 6/26/2015 Verified by gw

PRODUCT: FLEETWOOD SPEC. #10, 10A, 10B, 10C

PART OR ASSEMBLY: BILL OF MATERIALS

NO.	DATE	REVISIONS	BY

RW BUILDING CONSULTANTS, INC.
813.659.9197

DATE: 3/17/15
SCALE: N.T.S.
DWG. BY: JK
CHK. BY: LFS
DRAWING NO.: L-7351
SHEET 14 OF 14

R:\Clients\Fleetwood PERMANENT\Drawings\Lab Dwgs\L-7351..dwg

© 2015 R.W. BUILDING CONSULTANTS INC.

TABLE OF CONTENTS

SHEET #	DESCRIPTION
1	Table of contents
2	Test elevation
3	Horizontal cross sections
4	Horizontal cross sections
5	Horizontal cross sections
6	Vertical cross sections
7	Vertical cross sections
8	Vertical cross sections
9	Vertical cross sections
10	Vertical cross sections
11	Frame anchoring
12	Components and glazing details
13	Components
14	Bill of materials

Testing Evaluation Laboratories Inc.
Specimen Complies with Drawing
Deviations Noted - TEL# 01991346
Date 6/26/2015 Verified by gw

PRODUCT: FLEETWOOD SPEC. #9, 9A

PART OR ASSEMBLY: TABLE OF CONTENTS

NO.	DATE	BY

REVISIONS

RW BUILDING CONSULTANTS, INC.
813.659.9197

DATE: 3/17/15
SCALE: N.T.S.
DWG. BY: JK
CHK. BY: LFS
DRAWING NO.: L-7346
SHEET 1 OF 14

© 2015 R.W. BUILDING CONSULTANTS INC.

R:\Clients\Fleetwood PERMANENT\Drawings\Lab Dwgs\L-7346..dwg

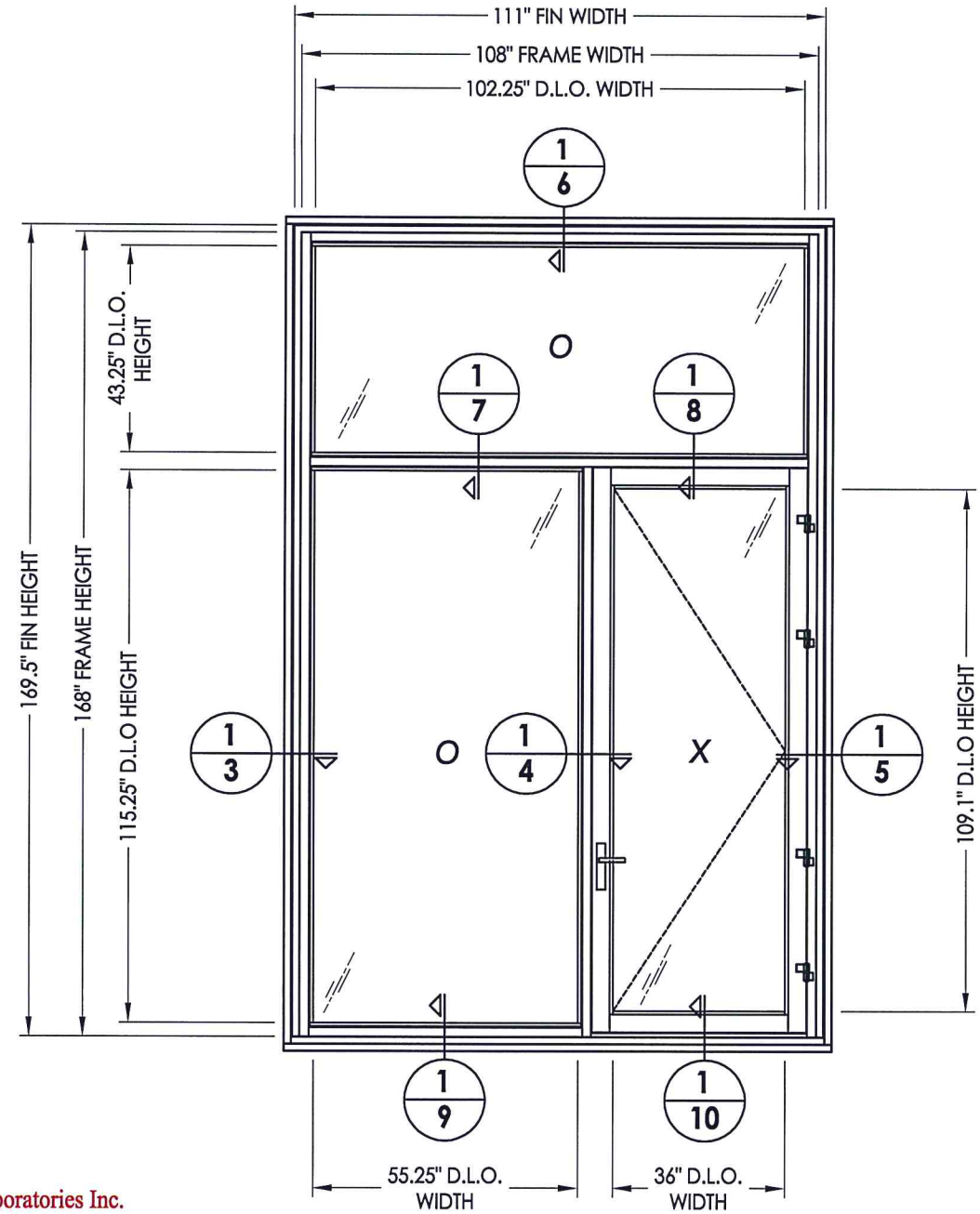

Testing Evaluation Laboratories Inc.
Specimen Complies with Drawing
Deviations Noted - TEL# 01991346
Date 6/26/2015 Verified by gw

PRODUCT: FLEETWOOD SPEC. #9, 9A

PART OR ASSEMBLY: TEST ELEVATIONS

NO.	DATE	BY

REVISIONS

RW BUILDING CONSULTANTS, INC.
813.659.9197

DATE: 3/17/15
SCALE: N.T.S.
DWG. BY: JK
CHK. BY: LFS
DRAWING NO.: L-7346
SHEET 2 OF 14

R:\Clients\Fleetwood PERMANENT\Drawings\Lab Dwgs\L-7346..dwg

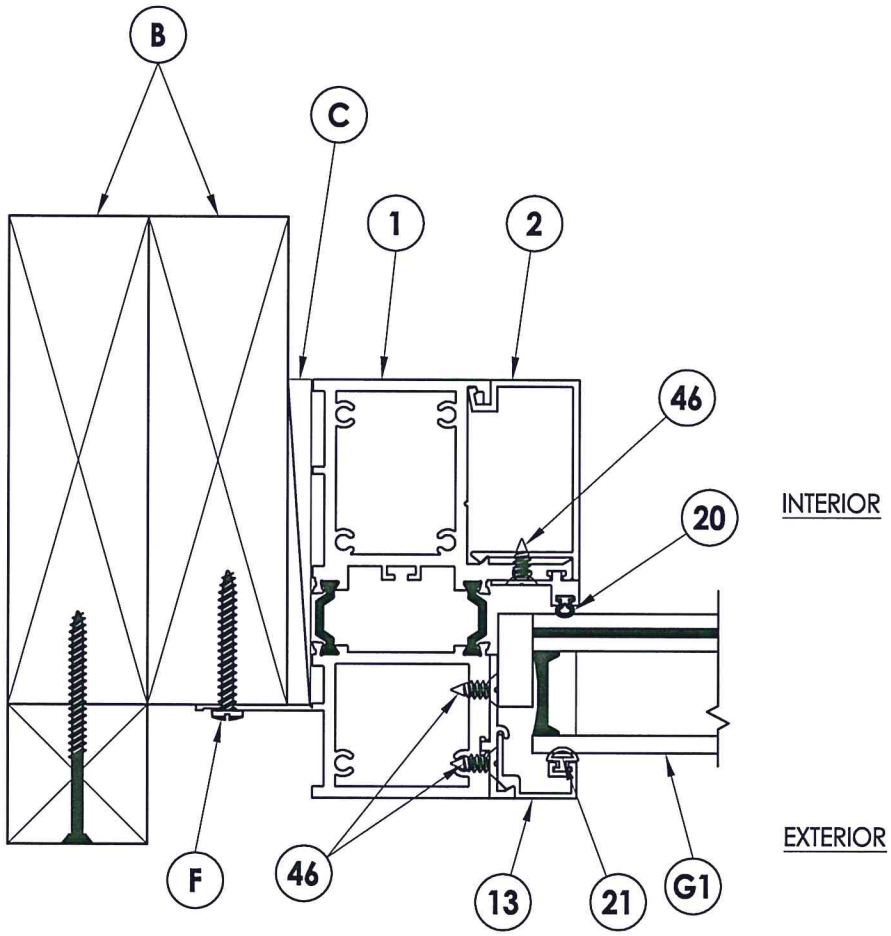

1/3 **HORIZONTAL CROSS SECTION**

Testing Evaluation Laboratories Inc.
Specimen Complies with Drawing
Deviations Noted - TEL# 01991346
Date 6/26/2015 Verified by gw

PRODUCT: FLEETWOOD SPEC. #9, 9A

PART OR ASSEMBLY: HORIZONTAL CROSS SECTIONS

NO.	DATE	BY

REVISIONS

RW BUILDING CONSULTANTS, INC.
813.659.9197

DATE: 3/17/15
SCALE: N.T.S.
DWG. BY: JK
CHK. BY: LFS
DRAWING NO.: L-7346
SHEET 3 OF 14

© 2015 R.W. BUILDING CONSULTANTS INC.

R:\Clients\Fleetwood PERMANENT\Drawings\Lab Dwgs\L-7346..dwg

INTERIOR

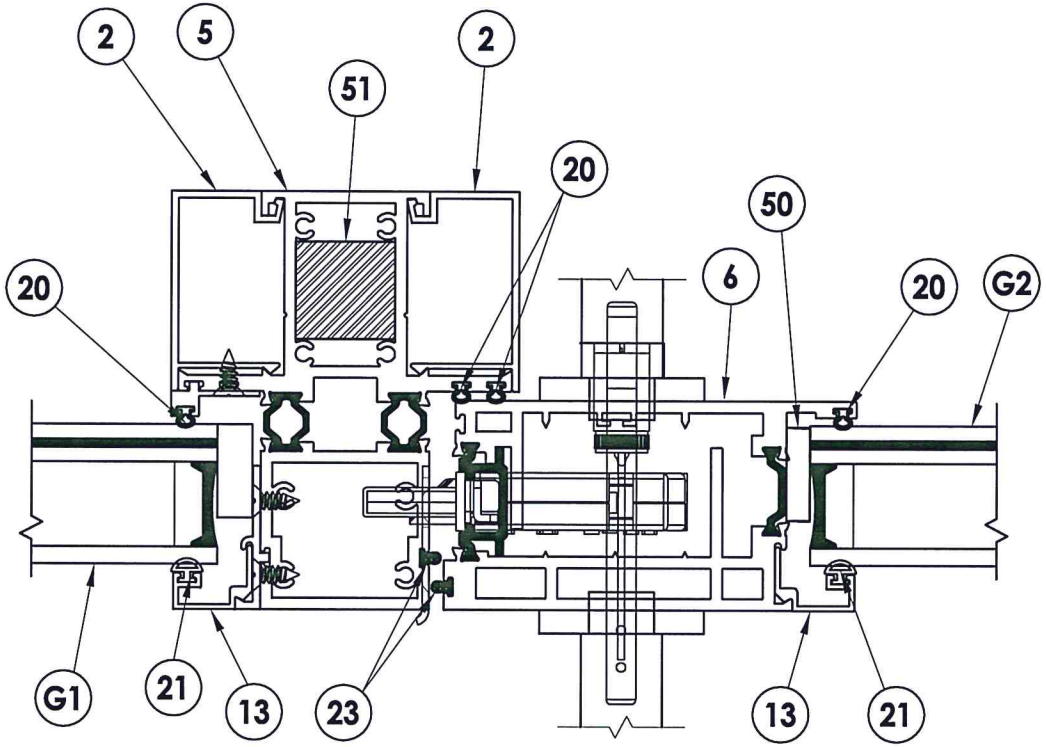

EXTERIOR

1/4 **HORIZONTAL CROSS SECTION**

Testing Evaluation Laboratories Inc.
Specimen Complies with Drawing
Deviations Noted - TEL# 01991346
Date 6/26/2015 Verified by

PRODUCT: FLEETWOOD SPEC. #9, 9A

PART OR ASSEMBLY: HORIZONTAL CROSS SECTIONS

NO.	DATE	REVISIONS	BY

RW BUILDING CONSULTANTS, INC.
813.659.9197

DATE: 3/17/15
SCALE: N.T.S.
DWG. BY: JK
CHK. BY: LFS
DRAWING NO.: L-7346
SHEET 4 OF 14

© 2015 R.W. BUILDING CONSULTANTS INC.

R:\Clients\Fleetwood PERMANENT\Drawings\Lab Dwgs\L-7346..dwg

Testing Evaluation Laboratories Inc.
Specimen Complies with Drawing
Deviations Noted - TEL# 01991346
Date 6/26/2015 Verified by gw

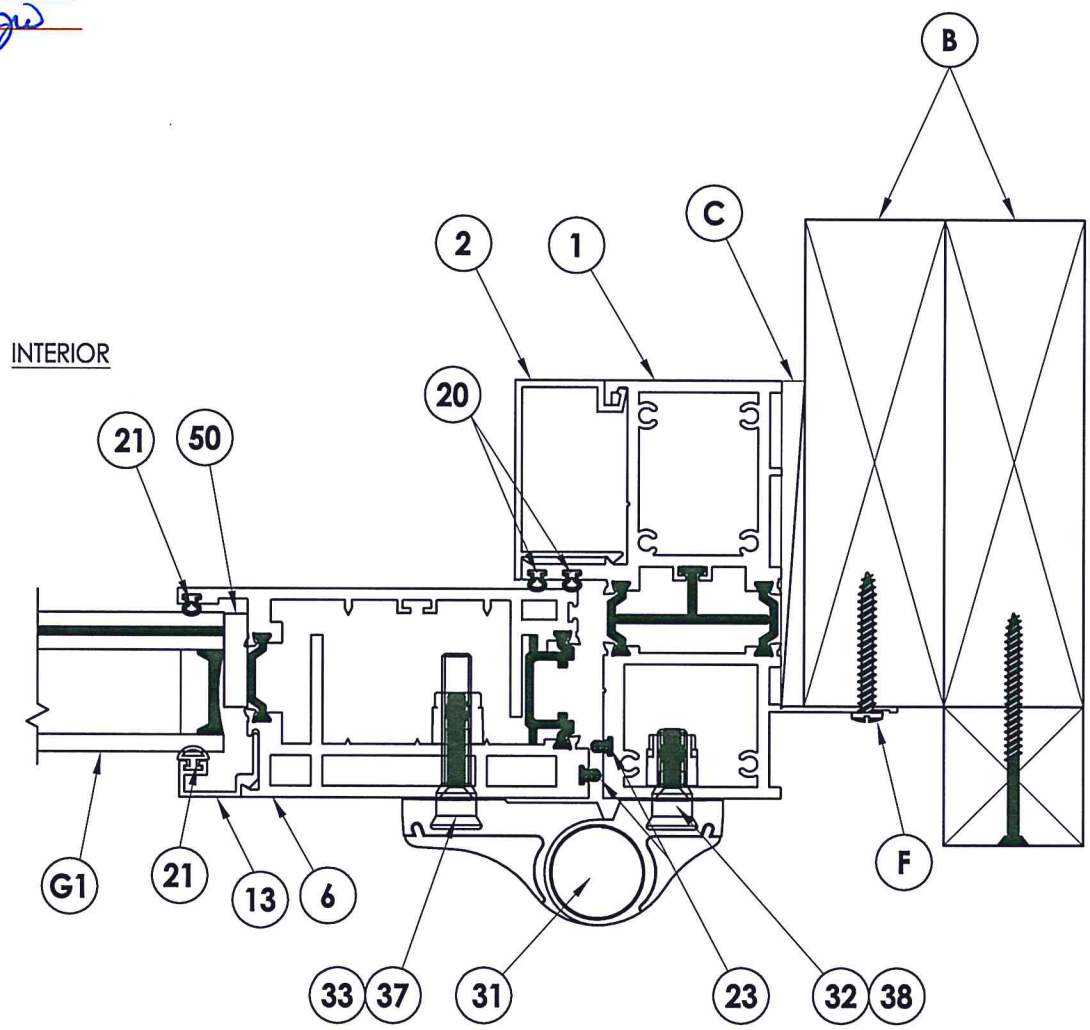

1/5 HORIZONTAL CROSS SECTION

PRODUCT: FLEETWOOD SPEC. #9, 9A

PART OR ASSEMBLY: HORIZONTAL CROSS SECTIONS

NO.	DATE	REVISIONS	BY

RW BUILDING CONSULTANTS, INC.
813.659.9197

DATE: 3/17/15
SCALE: N.T.S.
DWG. BY: JK
CHK. BY: LFS
DRAWING NO.: L-7346
SHEET 5 OF 14

R:\Clients\Fleetwood PERMANENT\Drawings\Lab Dwgs\L-7346..dwg

© 2015 R.W. BUILDING CONSULTANTS INC.

Testing Evaluation Laboratories Inc.
Specimen Complies with Drawing
Deviations Noted - TEL# 01991346
Date 6/26/2015 Verified by JW

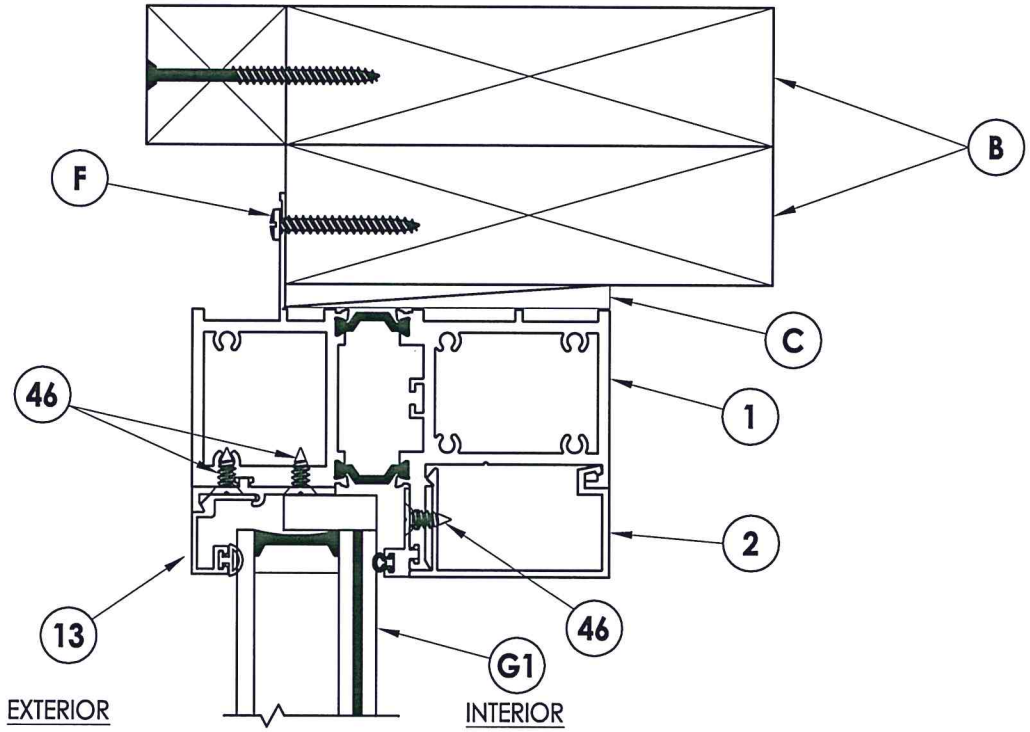

1/6 VERTICAL CROSS SECTION

PRODUCT: FLEETWOOD SPEC. #9, 9A

PART OR ASSEMBLY: VERTICAL CROSS SECTIONS

NO.	DATE	REVISIONS	BY

RW BUILDING CONSULTANTS, INC.
813.659.9197

DATE: 3/17/15
SCALE: N.T.S.
DWG. BY: JK
CHK. BY: LFS
DRAWING NO.: L-7346
SHEET 6 OF 14

R:\Clients\Fleetwood PERMANENT\Drawings\Lab Dwgs\L-7346..dwg

© 2015 R.W. BUILDING CONSULTANTS INC.

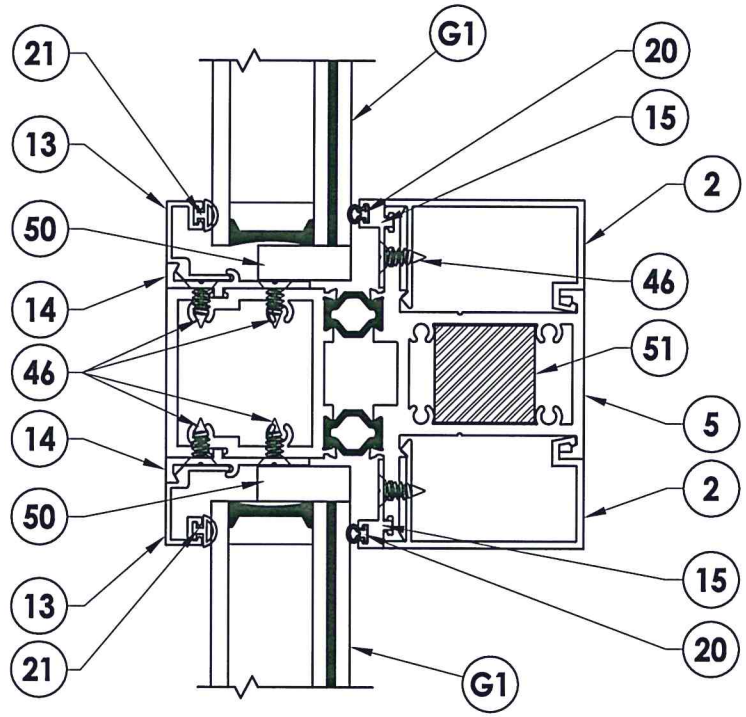

1/7 VERTICAL CROSS SECTION

Testing Evaluation Laboratories Inc.
Specimen Complies with Drawing
Deviations Noted - TEL# 01991346
Date 6/26/2015 Verified by

PRODUCT: FLEETWOOD SPEC. #9, 9A

PART OR ASSEMBLY: VERTICAL CROSS SECTIONS

NO.	DATE	REVISIONS	BY

RW BUILDING CONSULTANTS, INC.
813.659.9197

DATE: 3/17/15
SCALE: N.T.S.
DWG. BY: JK
CHK. BY: LFS
DRAWING NO.: L-7346
SHEET 7 OF 14

© 2015 R.W. BUILDING CONSULTANTS INC.

R:\Clients\Fleetwood PERMANENT\Drawings\Lab Dwgs\L-7346..dwg

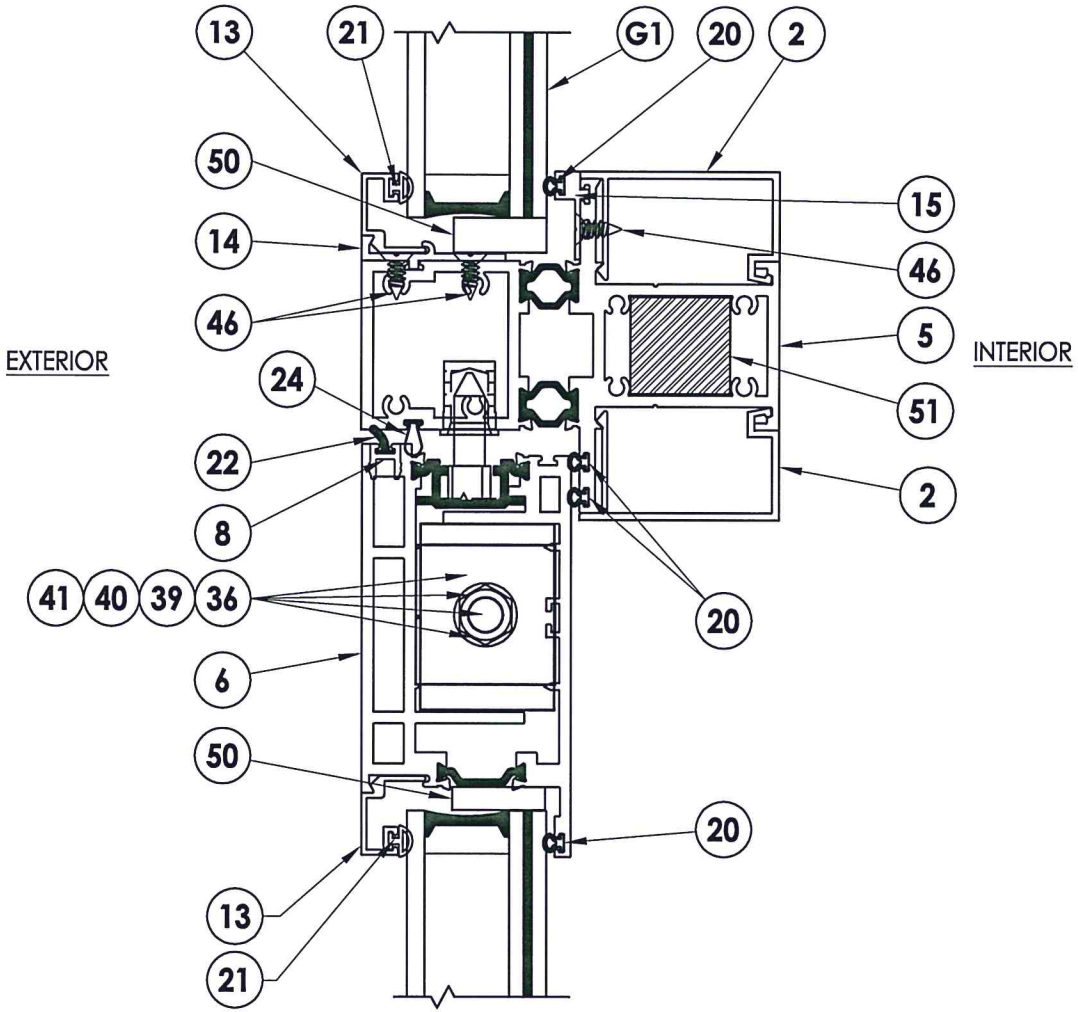

Testing Evaluation Laboratories Inc.
Specimen Complies with Drawing
Deviations Noted - TEL# 01991346
Date 6/26/2015 Verified by

1/8 **VERTICAL CROSS SECTION**

PRODUCT: FLEETWOOD SPEC. #9, 9A

PART OR ASSEMBLY: VERTICAL CROSS SECTIONS

NO.	DATE	REVISIONS	BY

RW BUILDING CONSULTANTS, INC.
813.659.9197

DATE: 3/17/15
SCALE: N.T.S.
DWG. BY: JK
CHK. BY: LFS
DRAWING NO.: L-7346
SHEET 8 OF 14

© 2015 R.W. BUILDING CONSULTANTS INC.

R:\Clients\Fleetwood PERMANENT\Drawings\Lab Dwgs\L-7346..dwg

Testing Evaluation Laboratories Inc.
Specimen Complies with Drawing
Deviations Noted - TEL# 01991346
Date 6/26/2015 Verified by

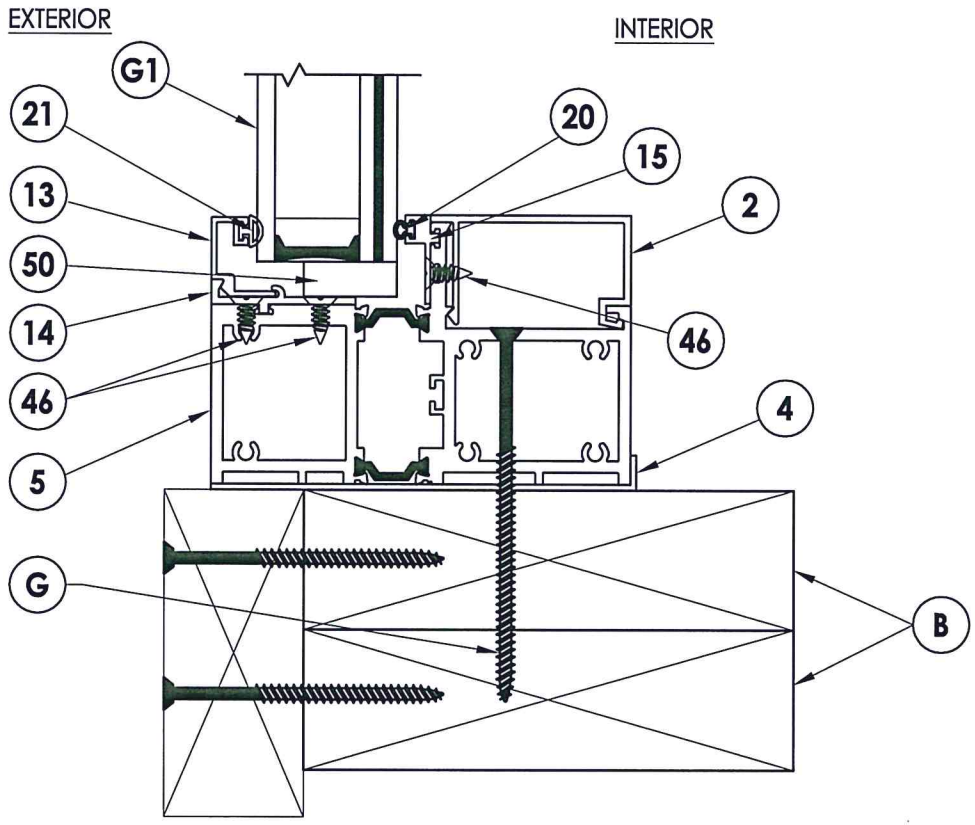

1/9 VERTICAL CROSS SECTION

PRODUCT: FLEETWOOD SPEC. #9, 9A

PART OR ASSEMBLY: VERTICAL CROSS SECTIONS

NO.	DATE	BY

REVISIONS

RW BUILDING CONSULTANTS, INC.
813.659.9197

DATE: 3/17/15
SCALE: N.T.S.
DWG. BY: JK
CHK. BY: LFS
DRAWING NO.: L-7346
SHEET 9 OF 14

© 2015 R.W. BUILDING CONSULTANTS INC.

R:\Clients\Fleetwood PERMANENT\Drawings\Lab Dwgs\L-7346..dwg

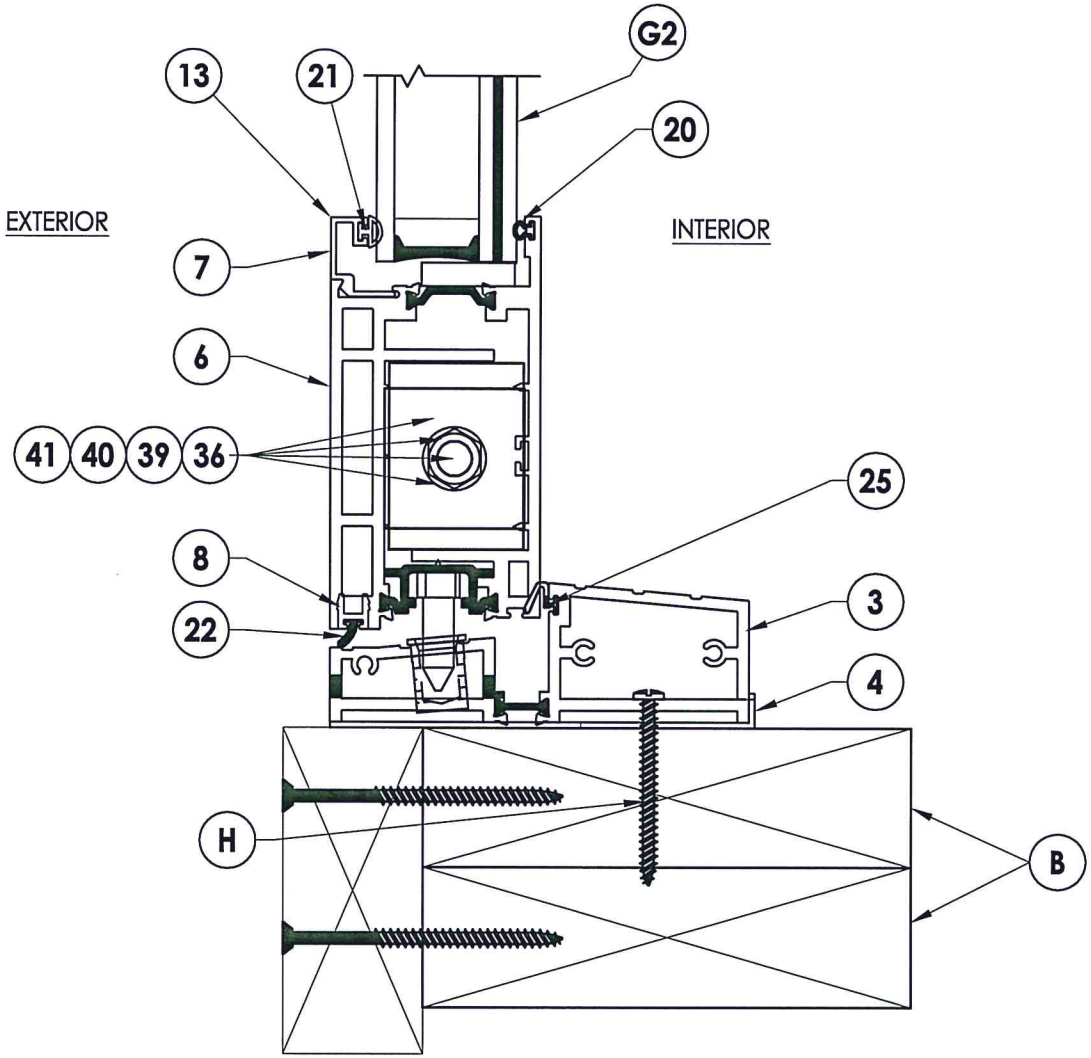

Testing Evaluation Laboratories Inc.
Specimen Complies with Drawing
Deviations Noted - TEL# 01991346
Date 6/26/2015 Verified by

1/10 **VERTICAL CROSS SECTION**

PRODUCT: FLEETWOOD SPEC. #9, 9A

PART OR ASSEMBLY: VERTICAL CROSS SECTIONS

NO.	DATE	REVISIONS	BY

RW BUILDING CONSULTANTS, INC.
813.659.9197

DATE: 3/17/15
SCALE: N.T.S.
DWG. BY: JK
CHK. BY: LFS
DRAWING NO.: L-7346
SHEET 10 OF 14

© 2015 R.W. BUILDING CONSULTANTS INC.

R:\Clients\Fleetwood PERMANENT\Drawings\Lab Dwgs\L-7346..dwg

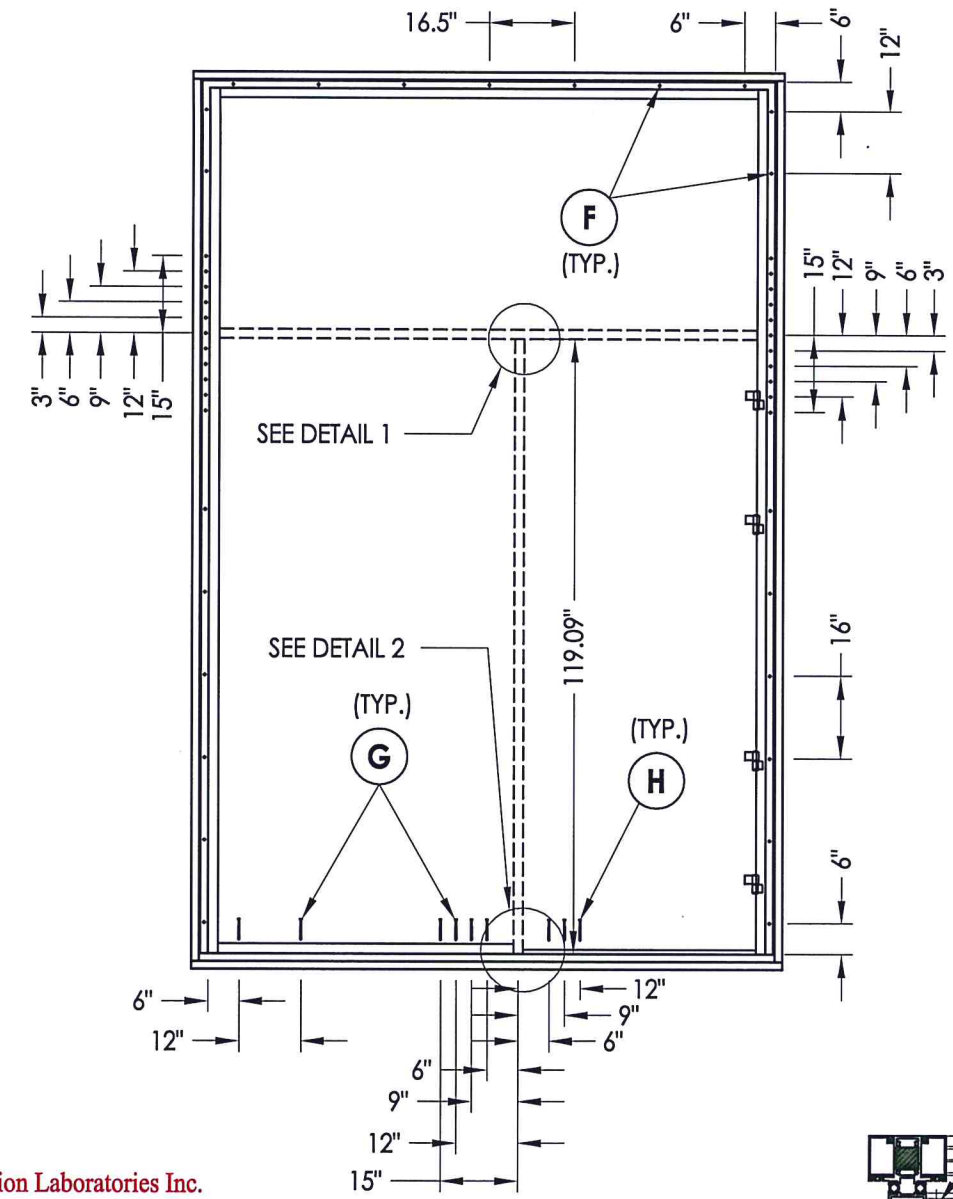

FRAME ANCHORING
(2X buck installation)

STRIKE DETAIL

HINGE DETAIL

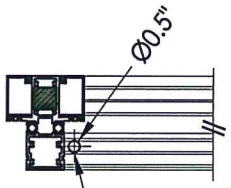

DETAIL 2

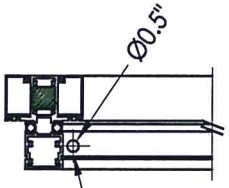

DETAIL 1

Testing Evaluation Laboratories Inc.
Specimen Complies with Drawing
Deviations Noted - TEL# 01991346
Date 6/26/2015 Verified by gw

PRODUCT: FLEETWOOD SPEC. #9, 9A

PART OR ASSEMBLY: TEST ELEVATIONS

NO.	DATE	REVISIONS	BY

RW BUILDING CONSULTANTS, INC.
813.659.9197

DATE: 3/17/15
SCALE: N.T.S.
DWG. BY: JK
CHK. BY: LFS
DRAWING NO.: L-7346
SHEET 11 OF 14

R:\Clients\Fleetwood PERMANENT\Drawings\Lab Dwgs\L-7346..dwg

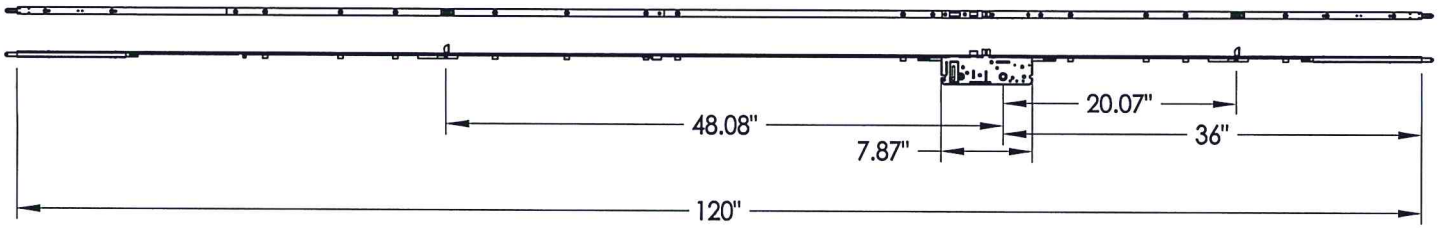

30 **MULTI-POINT LOCK**
TRUTH

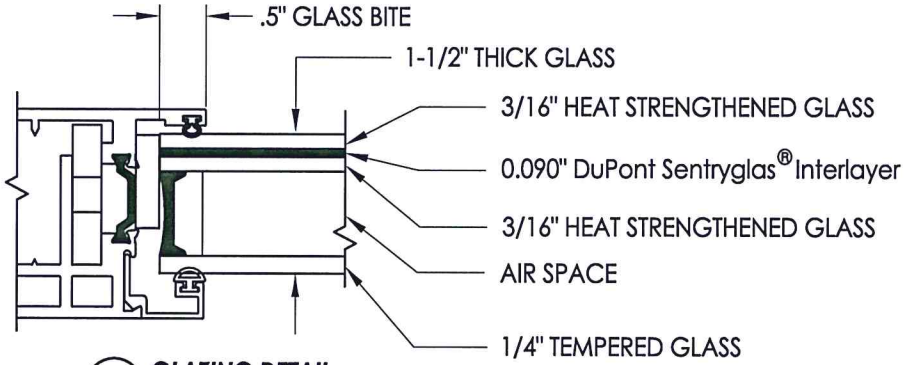

G2 **GLAZING DETAIL**

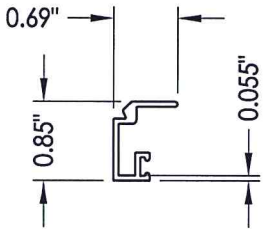

13 **1.5" GLASS STOP**

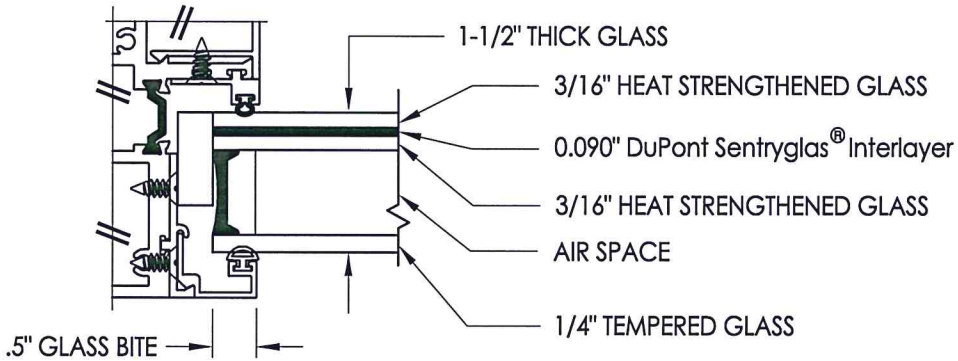

G1 **GLAZING DETAIL**

Testing Evaluation Laboratories Inc.
Specimen Complies with Drawing
Deviations Noted - TEL# 01991346
Date 6/26/2015 Verified by gw

PRODUCT: FLEETWOOD SPEC. #9, 9A

PART OR ASSEMBLY: COMPONENTS AND GLAZING DETAIL

NO.	DATE	REVISIONS	BY

RW BUILDING CONSULTANTS, INC.
813.659.9197

DATE: 3/17/15
SCALE: N.T.S.
DWG. BY: JK
CHK. BY: LFS
DRAWING NO.: L-7346
SHEET 12 OF 14

© 2015 R.W. BUILDING CONSULTANTS INC.

R:\Clients\Fleetwood PERMANENT\Drawings\Lab Dwgs\L-7346..dwg

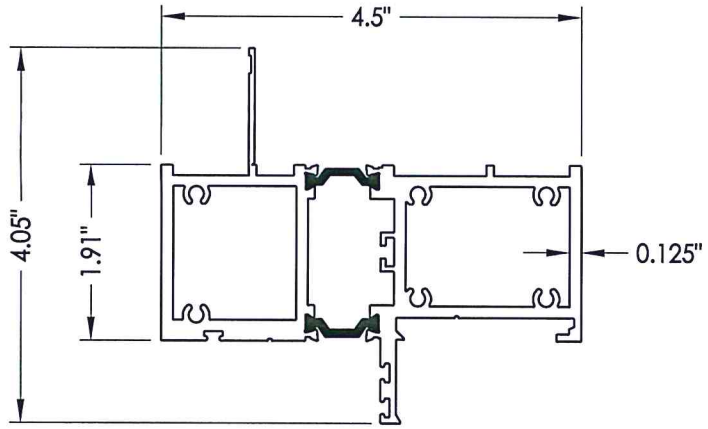

1 BLOCK HEAD & JAMBS

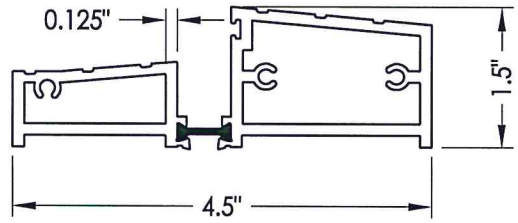

3 OUT-SWING SILL

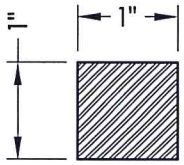

51 REINFORCEMENT

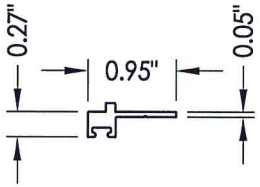

14 FIXED ADAPTOR

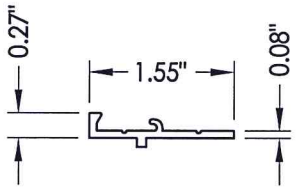

15 GLASS STOP ADAPTOR

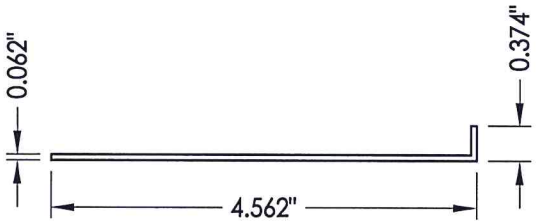

4 SILL PAN

Testing Evaluation Laboratories Inc.
Specimen Complies with Drawing
Deviations Noted - TEL# 01991346
Date 6/26/2015 Verified by JW

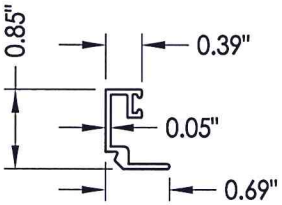

13 1-1/2" GLASS STOP

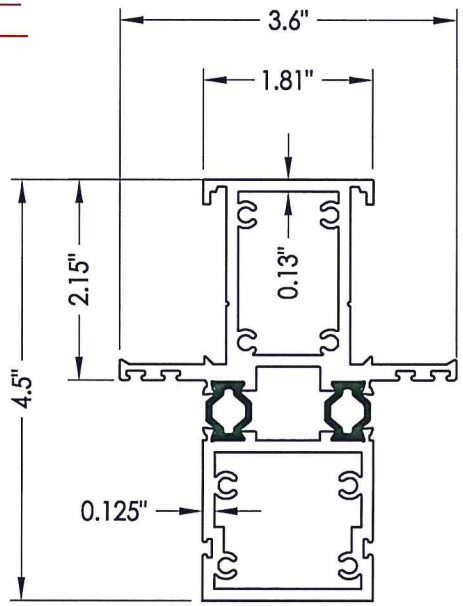

5 FRAME TEE BAR

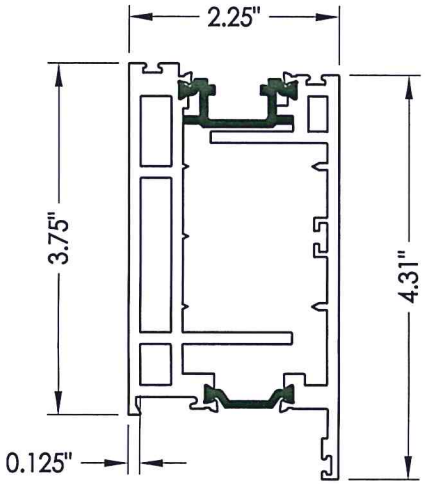

6 SASH

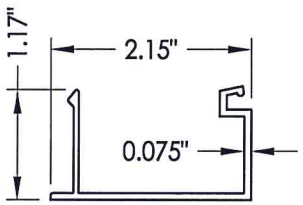

2 FRAME SNAP-IN

PRODUCT: FLEETWOOD SPEC. #9, 9A

PART OR ASSEMBLY: COMPONENTS

NO.	DATE	REVISIONS	BY

RW BUILDING CONSULTANTS, INC.
813.659.9197

DATE: 3/17/15
SCALE: N.T.S.
DWG. BY: JK
CHK. BY: LFS
DRAWING NO.: L-7346
SHEET 13 OF 14

R:\Clients\Fleetwood PERMANENT\Drawings\Lab Dwgs\L-7346..dwg

© 2015 R.W. BUILDING CONSULTANTS INC.

BILL OF MATERIALS

ITEM #	DESCRIPTION	PART#	MATERIAL
B	2X BUCK SG >= 0.55	-	WOOD
C	1/4" MAX. SHIM SPACE	-	-
D	#10 x 2-3/4" PFH WOOD SCREW	-	STEEL
F	#10 x 1-1/2" PFH WOOD SCREW	-	STEEL
G	1/4" x 4" PPH CONCRETE SCREW	-	STEEL
H	#10 x 2" PPH WOOD SCREW	-	STEEL
1	FRAME	3911	6063-T6 ALUM
2	FRAME SNAP-IN	3912	6063-T6 ALUM
3	OUT-SWING SILL	3202	6063-T6 ALUM
4	SILL PAN	-	SHEET METAL (ALUMINUM)
5	FRAME TEE BAR	3913	6063-T6 ALUM
6	SASH	3902	6063-T6 ALUM
7	1" GLASS STOP	3907	6063-T6 ALUM
8	ATLANTIC SEAL CLIP	3916	6063-T6 ALUM
9	CORNER BLOCK (CUT FROM 3906)	25167	6063-T6 ALUM
13	1-1/2" GLASS STOP	3908	6063-T6 ALUM
14	ATLANTIC NARROW FIXED ADAPTOR	3915	6063-T6 ALUM
15	ATLANTIC NARROW FIXED GLASS STOP ADAPTOR	3917	6063-T6 ALUM
20	BULB VINYL - MINI (EPDM 70 Durometer)	25199	TREMCO, # TX20801E
21	BULB VINYL - LARGE (EPDM 70 Durometer)	25031	TREMCO, # TX19638E
22	FOAM SEAL	25196	EMESBURY, # 32390
23	Q-LON FOAM SEAL	25189	SCHLEGEL CORP., # Q225T190
24	Q-LON FOAM SEAL	25058	SCHLEGEL CORP., # Q375T190
30	LOCKING HARDWARE (5 point lock)	-	TRUTH
31	BUTT HINGE	-	SAVIO
32	BACK UP KIT	20535	SAVIO
33	HINGE BOLT, 8M X 48MM (FOR PANEL)	25026	SAVIO
36	BACK UP PLATE FOR CORNER BLOCK	25025	-
37	MACHINE SCREW NO 10-32, FHP 1.125"	25074	STAINLESS STEEL
38	MACHINE SCREW NO 10-32, FHP .75"	25073	STAINLESS STEEL
39	HEX HEAD CAP SCREW .375-16, 2.250"	25175	STAINLESS STEEL
40	.375-16 SS. HEX NUT	25023	STAINLESS STEEL
41	.375 SPLIT LOCK WASHER	25024	STAINLESS STEEL
42	.375-16 SS. HEX NUT	25176	STAINLESS STEEL
46	SCREW NO 10, UFHP .5"	20275	STAINLESS STEEL
50	4" LONG SETTING BLOCK	18620	-
51	REINFORCEMENT (1" X 1")	-	6061-T6 ALUM

Testing Evaluation Laboratories Inc.
Specimen Complies with Drawing
Deviations Noted - TEL# 01991346
Date 6/26/2015 Verified by gw

PRODUCT: FLEETWOOD SPEC. #9, 9A

PART OR ASSEMBLY: BILL OF MATERIALS

NO.	DATE	BY

REVISIONS

RW BUILDING CONSULTANTS, INC.
813.659.9197

DATE: 3/17/15
SCALE: N.T.S.
DWG. BY: JK
CHK. BY: LFS
DRAWING NO.: L-7346
SHEET 14 OF 14

© 2015 R.W. BUILDING CONSULTANTS INC.

R:\Clients\Fleetwood PERMANENT\Drawings\Lab Dwgs\L-7346..dwg