ARCHETYPE 3” PRECISION ROLLER

TECHNICAL INFORMATION

Overview

The Archetype 3” Precision Roller is used on the 3050, 3070, 3070-T and 3070HI Doors. The stainless steel roller features a set of 3” diameter wheels that contain Swiss precision-machined bearings to provide the ultimate in rolling performance.

Technical Information

Rolling Performance:

The operating force required to move an approximately 300 pound panel, is between 1.0 and 3.0 pounds. It requires 2-3 pounds to get the panel moving and 1-2 pounds to keep it moving.

Material: All Stainless Steel Construction

Load Rating: Each panel can efficiently handle 1800 pounds.

Roller Life:

Estimate bearing life, based on a 600-pound panel is 7,000,000 revolutions. An 8’ x 10’ OX door travels approximately 4’ to open and 4’ to close or 12 roller revolutions. Based on the estimated bearing life, the precision rollers in a door that is opened and closed on an average of 10 times a day would last for a 160 years.

Seal and Lubrication:
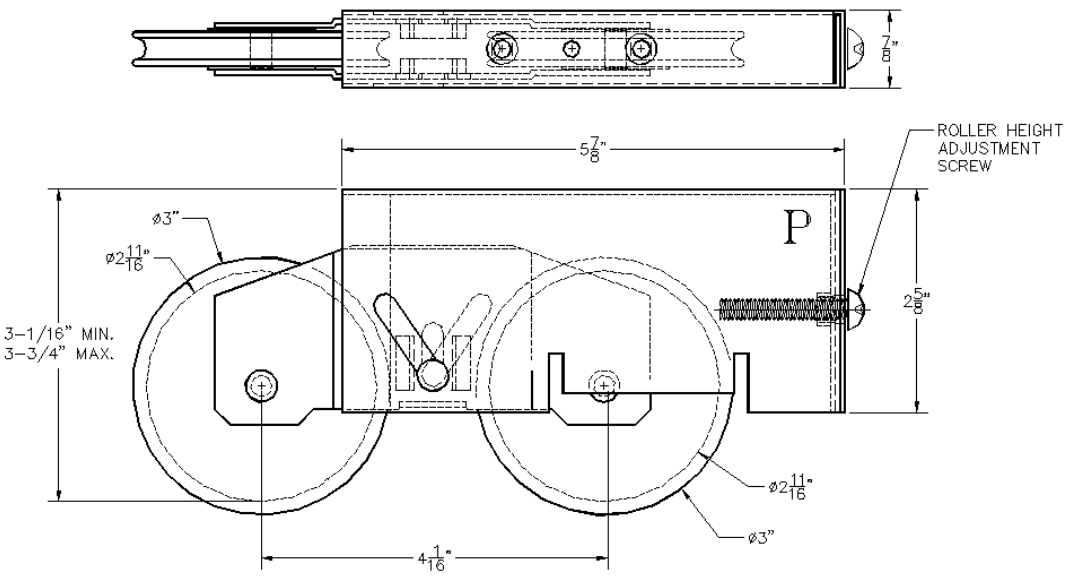
The precision bearings contain contact seals and a low friction lubricant. The contact seals protect the bearing from contamination by dirt and water, and loss of bearing lubricant. The lubrication provided with the precision bearing will last the life of the product.