FLEETWOOD
WINDOWS & DOORS
FleetwoodUSA.com

SERIES 3800-T--SERIES 3070

OPEN POCKET CONCEPT DRAWING

U:\Cadfiles_Admin_Products\3800-T\Concept_Dwgs

DWG NO.: 3800-T-C02

DATE: 12/10/14

SCALE: 1/4

CONCEPT TO ILLUSTRATE SERIES 3800-T USED
AS AN OPEN POCKET FOR MULTI-SLIDING DOORS

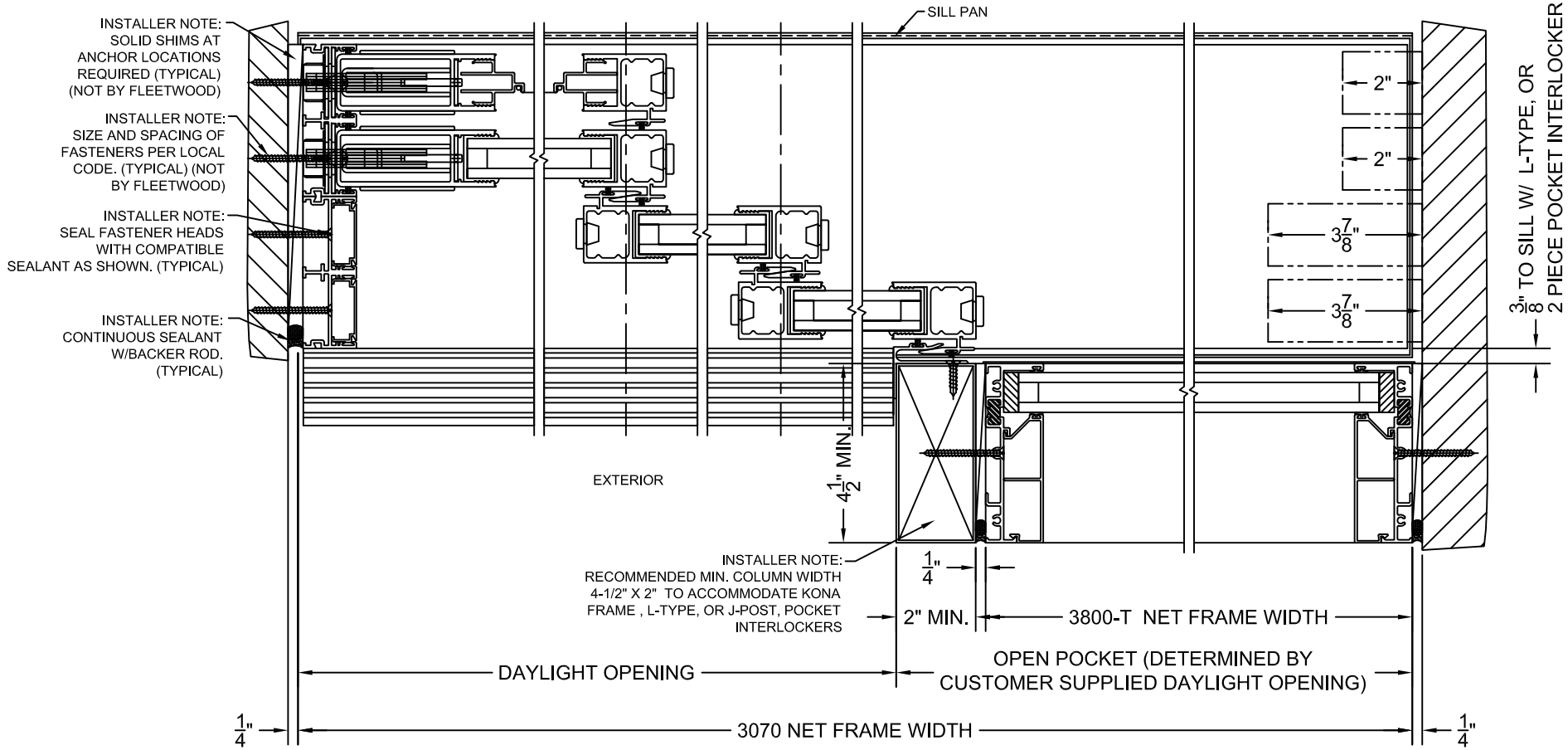

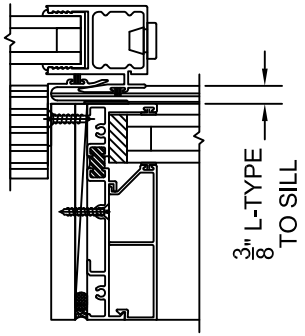

L-TYPE POCKET INTERLOCKER
(1/2"X4 1/2" SOLID COLUMN SHOWN)

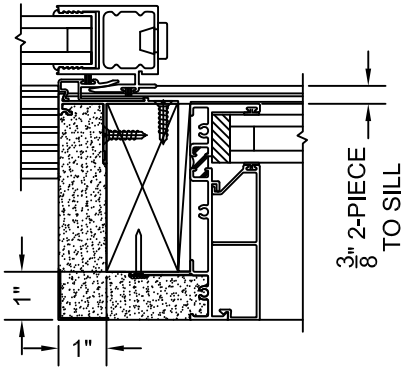

2-PIECE POCKET INTERLOCKER
(ALLOWS 1" FINISH WITH KONA NAIL-ON FRAME)

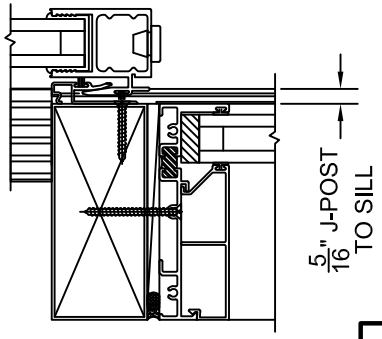

J-POST POCKET INTERLOCKER
(2"X4 1/2" COLUMN SHOWN)

SERIES 3800-T