Fenestration Testing Laboratory, Inc.

10235 8th Street • Rancho Cucamonga, CA 91730 • PH. (909) 477-4343 • FAX (909) 477-4348

TESTED FOR
Fleetwood Windows and Doors
1 Fleetwood Way
Corona, CA 92879

1.0 PURPOSE

The purpose of this report is to present the testing methods employed and the test result obtained during the performance testing of one (1) **Thermally Broken Aluminum Out-Swing Door** described in paragraph 4.0 of this report.

2.0 TEST REFERENCES

2.1 ASTM E 283 Air Infiltration
2.2 ASTM E 547 Water Penetration
2.3 ASTM E 330 Uniform Load Structural

3.0 SUMMARY

The test results in paragraph 5.0 indicate the performance levels achieved by the test sample described in paragraph 4.0 of this report when tested according to the above referenced specifications.

4.0 SAMPLE SUBMITTED BY MANUFACTURER

SERIES: 3200-T Swing Door

CONFIGURATION: Double Out-Swinging XX

FRAME SIZE: 82.00" x 98.00"

PANEL SIZE(S): 39.50" x 96.00" (Primary and Secondary panels)

GLASS: Each panel contained an insulated glass unit which was 1" overall wide and contained 6 mm tempered glass on each side.

SPACER: The insulated glass unit spacers were each a metal box type and measured 0.5" in width.

GLAZING: The insulated glass units were glazed from the outside onto hollow bulb vinyl. Rubber setting block measuring 1/8" x 1" x 4" was set at diagonally opposite corners of each panel. Snap-in aluminum glazing stop was applied full perimeter on the outside and contained a strip of hollow bulb vinyl.

WEEPAGE: The sill outside face contained a 5/8" x 3/16" weep hole 4" from each end. The hole went through to the sill channel. Each door panel bottom rail contained a 3/8" diameter vertical weep at each end.

WEATHERING:

The sill contained a foam filled Q-lon flap vinyl facing out.
The jambs and head each contained four strips of Q-lon foam filled bulb vinyl; two strips faced out and two strips faced the edge of their respective door panel.

The secondary panel contained the following:

- hinge stile contained one strip of Q-lon bulb vinyl.
- astragal stile contained one strip of Q-lon bulb vinyl facing the primary panel and one strip facing out.
- a 1" long piece of Q-lon was applied with adhesive to the bottom of the astragal stile facing in. It was inserted in a groove between the astragal and the stile to which it was attached (for higher water performance to 4.5 psf only).

The primary panel contained the following:

- hinge stile contained one strip of Q-lon bulb vinyl.
- a 1" long piece of Q-lon was on the inside surface of the lock stile (the 1" piece was added only for higher water performance to 4.5 psf)

The drip edge metal contained a sweep vinyl (the drip edge was applied for higher water performance to 4.5 psf).

HARDWARE:

Each door panel was supported in its respective jamb with four sets of two-leaf butt hinges. For each hinge, one leaf was fastened to the frame with four (4) #10 x 1" PFH screws into the panel and the other leaf was fastened with four (4) #10 x 0.5" screws into the jamb. The hinge screws went into stainless steel back up plates.

The primary panel contained an FSB latch and dead bolt lock set. The handles were fastened with a pair of screws and the lock was fastened with a pair of screws. When locked, the latch and dead bolt engaged the metal strike fastened to the astragal.

The secondary panel, contained a dummy handle set fastened with a pair of screws and a top and bottom shoot bolt lock actuated by a lever in the astragal stile.

The top rail of each panel contained a glass jack screw 8" from meeting their respective lock stile.

CONSTRUCTION:

The frame sill to jamb corners were mechanically joined with three #10 x 2" PFH screws. The head to jamb corners were mechanically joined with one #10 x 1" screw and one #10 x 2" PFH screw.

Each panel corner was joined with a corner block, bolt and nut plate. Each aluminum corner block was welded to its respective rail and also fastened with four #8 x 2" PFH screws to its respective rail. The nut plates were in the stiles.

The astragal mated to the secondary panel stile and was fastened with three pairs of #8 x 2" PFH screws.

CAULKING:

The frame and panel corners were sealed full profile. The frame sill was set in sealant.

ANCHORING:

The frame head and jambs were fastened into a 2" x 10" wooden rough opening with #10 x 1.5" PPH screws 6" from each end and 16" on center in the field.

5.0 TEST PROCEDURES AND RESULTS

5.1 All testing procedures were performed in accordance with the performance requirements of the test specifications referenced in paragraph 2.0 of this report.

5.2 TEST RESULTS

TEST DESCRIPTION	MEASURED	ALLOWED
Air Infiltration (ASTM E 283)		
75 Pa	1.0 L/s•m²	1.5 L/s•m²
(1.57 PSF)	0.2 CFM/ft²	0.3 CFM/ft²
The tested specimen exceeds the performance requirements specified in AAMA/WDMA/CSA 101 / I.S.2 / A440 for air leakage resistance.		
Water Penetration (ASTM E 547) without drip edge at bottom of panels		
140 Pa (3.0 PSF)	No Leakage	No Leakage
No Screen		
Water Penetration (ASTM E 547) with drip edge at bottom of panels		
220 Pa (4.5 PSF)	No Leakage	No Leakage
No Screen		
Uniform Load Deflection (ASTM E 330)		
720 Pa (15.00 PSF) POS	4.50 mm (0.18")	Report Only
720 Pa (15.00 PSF) NEG	6.25 mm (0.25")	Report Only
Uniform Load Structural (ASTM E 330)		
1080 Pa (22.50 PSF) POS	0.00 mm (0.00")	9.75 mm (0.38")
1080 Pa (22.50 PSF) NEG	0.00 mm (0.00")	9.75 mm (0.38")

For a complete description of the tested sample refer to the attached four (4) pages consisting of the bill of materials, elevation drawings, cross section drawings and part drawings. The above referenced drawings and bill of materials of the test specimen are on file and have been compared to the sample submitted. Test sample sections, bill of materials, drawings, and a copy of this report will be retained at the test laboratory for four years.

This test report may not be modified in any way without the written consent of Fenestration Testing Laboratory.

The preceding test results relate only to the tested specimen and were obtained by using the applicable ASTM test methods. This report does not constitute certification of this product. Only an accredited administrator/validator can grant certification.

Testing Completed: December 8, 2014
Report Completed: December 31, 2014

Pete Cruz
Test Engineer

Jim Cruz
Testing Manager

TABLE OF CONTENTS

TEST SPECIMEN

1. SERIES / MODEL: SERIES 3200–T
2. PRODUCT TYPE: HINGED DOOR

GENERAL NOTES

1. BUCKING OPENINGS & BUCKING FASTENERS MUST BE PROPERLY DESIGNED & INSTALLED TO TRANSFER LOADS TO THE STRUCTURE AND TO BE REVIEWED BY BUILDING OFFICIAL.

2. ALL HARDWARE & FASTENERS SHALL BE IN ACCORDANCE WITH THESE DRAWINGS & MAY NOT VARY UNLESS SPECIFICALLY MENTIONED ON THE DRAWINGS.

3. MATERIALS, INCLUDING BUT NOT LIMITED TO STEEL SCREWS, THAT COME INTO CONTACT WITH OTHER DISSIMILAR MATERIALS SHALL MEET THE REQUIREMENTS OF AAMA AND BUILDING CODE.

SPECIFICATIONS

1. AAMA/WDMA/CSA 101/I.S.2/A440–08 – (NON–IMPACT GLAZING)

CORNERS CONSTRUCTION

1. FRAME CORNER: THE HEAD AND SILLS ARE BUTTED TO THE JAMBS AND ATTACHED WITH SCREWS.
2. PANEL CORNER: THE TOP AND BOTTOM RAILS ARE BUTTED TO THE VERTICAL STILES AND ATTACHED WITH BOLTS AND WELDED.

GLAZING

NON–IMPACT: 1": CLEAR SB60 6MM–T, 0.5 AIR, CLEAR 6MM–T

CONFIGURATIONS

TYPES: OUT–SWING H & HH
SILLS: STANDARD

HARDWARE

1. TRUTH HINGES, 12" FROM CORNER, 24" APART, 4 HINGES.
2. HARDWARE: 5 LOCKING POINTS.

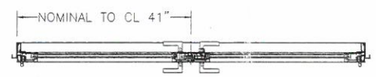

"A–A"

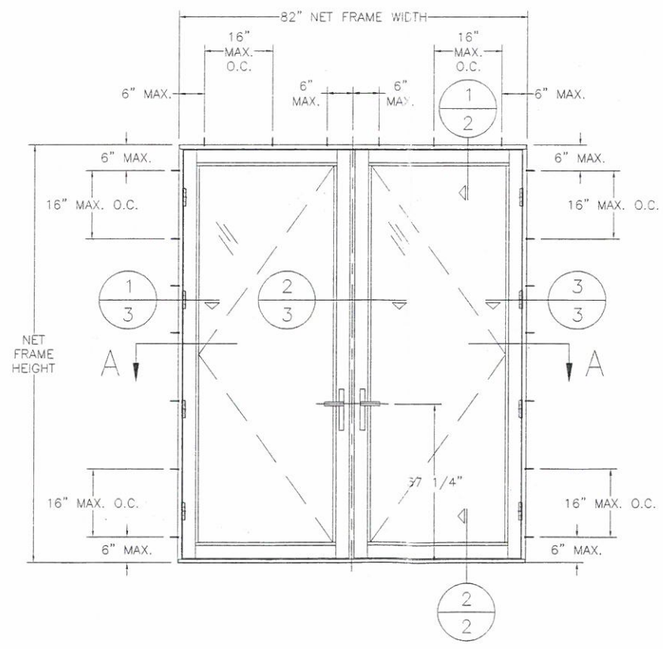

*FRAME ANCHOR REQUIREMENTS TABLE

OPENING TYPE (SUBSTRATE)	FRAME TO OPENING FASTENER TYPE	MINIMUM EMBEDMENT	MINIMUM EDGE DIST.
2X_ WOOD FRAME OR BUCK	(1)NO. 10 SMS SCREW	1 1/2"	3/4"
MIN. 18 GA. 33 KSI STEEL STUD	(1)NO. 10 SMS SCREW	FULL	3/8"
CMU/CONCRETE	(2)3/16" CONCRETE SCREWS	1 1/4"	2 5/8"

(1) SMS SCREWS
(2) CONCRETE SCREWS SHALL BE 3/16" ITW TAPCON

DESIGN PRESSURE TABLE

MAX DOOR HEIGHT	MAX PANEL DIMENSION	OVERALL D.L.O. DIMENSION	DESIGN PRESSURE (PSF)	
			POSITIVE	NEGATIVE
98"	40 7/8"	31 13/16"	+15.0	–15.0

FENESTRATION TESTING LAB
REPORT NO: T14-087
DATE: 12-31-14

REVISIONS	DATE	DRAWN BY	COMMENTS

DRAWN BY: BL
DATE: 12/01/14
JOB NUMBER: 358037-V2

MATERIAL: SERIES 3200-T
CUSTOMER: FLEETWOOD WINDOWS AND DOORS
JOB NAME: AAMA TEST

FLEETWOOD WINDOWS AND DOORS
1 FLEETWOOD WAY CORONA, CALIFORNIA 92879 - www.fleetwoodusa.com

SCALE : NOT TO SCALE
DRAWING NO. : 1
SHEET : 1 OF 4

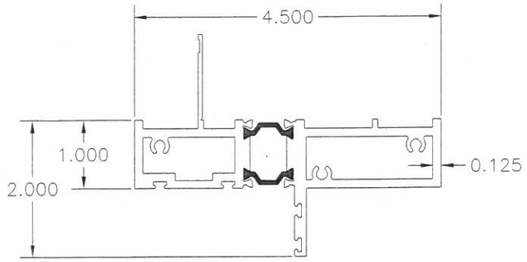

1 NAIL-ON HEAD & JAMBS

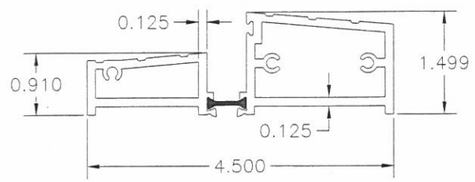

2 OUT-SWING SILL

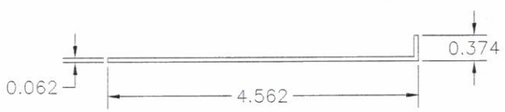

3 SILL PAN

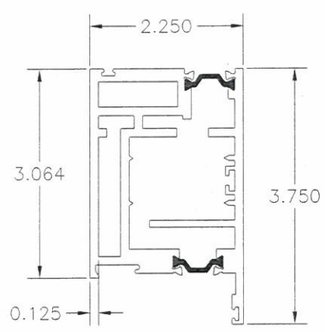

4 SASH

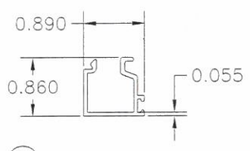

5 1" GLASS STOP

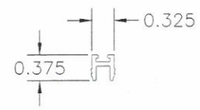

6 ATLANTIC SEAL CLIP

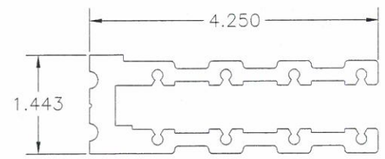

7 CORNER BLOCK (CUT FROM 3906)

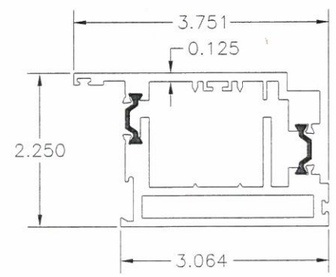

8 SASH YOKE

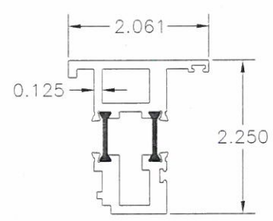

9 ASTRAGAL

71 BOTTOM DRIP (FOR HIGH WATER)

ITEM #	PART	ITEM DESCRIPTION	MANUFACTURER/NOTES
		PARTS	
1	3201	FRAME	6063-T6 ALUMINUM - EXTRUDED
2	3202	OUT-SWING SILL	6063-T6 ALUMINUM - EXTRUDED
3		SILL PAN	6063-T6 ALUMINUM - EXTRUDED
4	3203	SASH	SHEET METAL (ALUMINUM)
5	3907	1" GLASS STOP	6063-T6 ALUMINUM - EXTRUDED
6	3916	ATLANTIC SEAL CLIP	6063-T6 ALUMINUM - EXTRUDED
7	25201	CORNER BLOCK (CUT FROM 3906)	6063-T6 ALUMINUM - EXTRUDED
8	3205	SASH YOKE	6063-T6 ALUMINUM - EXTRUDED
9	3206	ASTRAGAL	6063-T6 ALUMINUM - EXTRUDED
		SEALS & SEALANTS	
20	25199	BULB VINYL - MINI (EPDM 70 Durometer)	TREMCO, # TX20801E
21	25031	BULB VINYL - LARGE (EPDM 70 Durometer)	TREMCO, # TX19638E
22	25196	FOAM SEAL	EMESBURY, # 32390
23	25189	Q-LON FOAM SEAL	SCHLEGEL CORP., # Q225T190
24	25190	Q-LON FOAM SEAL	SCHLEGEL CORP., # Q250T190
25	25059	Q-LON FOAM SEAL	SCHLEGEL CORP., # QEZ 376
		HARDWARE	
30	25321	FSB LATCH & DEADBOLT LOCK	
31	25235	ADJUSTABLE HINGE, HORIZONTAL GUIDE LH	ALUMINUM
32	25236	ADJUSTABLE HINGE, HORIZONTAL GUIDE RH	ALUMINUM
33	25237	ADJUSTABLE HINGE, VERTICAL SET LH	ALUMINUM
34	25238	ADJUSTABLE HINGE, VERTICAL SET RH	ALUMINUM
35	25192	HINGE BACK UP PLATE - FRAME	STAINLESS STEEL
36	25202	HINGE BACK UP PLATE SPACER - FRAME	ALUMINUM
37	25194	HINGE INTERIOR BACK UP PLATE - PANEL	STAINLESS STEEL
38	25195	HINGE EXTERIOR BACK UP PLATE - PANEL	STAINLESS STEEL
39	20547	LARGE GLASS JACK, 1" GLAZING	PLASTIC
40	20415	ADJUSTMENT PLATE JACKSCREW	STAINLESS STEEL
41	25341	SOCKET HEAD CAP SCREW .250-20, 2.750"	STAINLESS STEEL
42	25025	BACK UP PLATE FOR PANEL	
43	25203	HEX HEAD CAP SCREW .375-16, 2.0"	STAINLESS STEEL
44	25023	.375-16 SS. HEX NUT	STAINLESS STEEL
45	25024	.375 SPLIT LOCK WASHER	STAINLESS STEEL
46	25176	.375-16 SS. HEX NUT	STAINLESS STEEL
47	20350	SCREW NO 10, PPH 1.0"	STAINLESS STEEL
48	20355	SCREW NO 10, PPH 2.0"	STAINLESS STEEL
49	25486	#10-32 FH TORX MACHINE SCREW, 0.5"	STAINLESS STEEL
50	20266	SCREW NO 10, UFHP .375"	STAINLESS STEEL
51	20275	SCREW NO 10, UFHP .5"	STAINLESS STEEL
52	20258	SCREW NO 8, FHP 2.0"	STAINLESS STEEL
53	25488	#10-32 FH TORX MACHINE SCREW, 1.0"	STAINLESS STEEL
54	20254	SCREW NO 8, FHP 1.5"	STAINLESS STEEL
55	-	SCREW NO 10-32, FHP 2.75"	STAINLESS STEEL
56	25174	SCREW NO 8-32, FHP 0.875"	STAINLESS STEEL
57	25343	SCREW NO 8-32, FHP 1.125"	STAINLESS STEEL
58	25344	M8, 12MM, 1.25MM PITCH	STAINLESS STEEL
	-	NO. 10 X 1-1/2" PHD SMS 24" O.C.	STAINLESS STEEL
59	25224	SHOOTBOLT ROD	STAINLESS STEEL
60	20542	BRASS SHOOTBOLT CUP	BRASS
61	25344	SHOOTBOLT GUIDE	ALUMINUM
62	25344	SHOOTBOLT ADAPTER	STAINLESS STEEL
63	25223	LEVER ACTIVATED GEAR, BACKSET 30MM	
		MISCELLANEOUS	
70	18621	SETTING BLOCK 1/8 X 1 X 4	AS REQ'D
70	-	BOTTOM DRIP (FOR HIGH WATER)	AS REQ'D

FENESTRATION TESTING LAB
REPORT NO: T14-087
DATE: 12-31-14

REVISIONS	DATE	DRAWN BY	COMMENTS

DATE: 12/01/14
DRAWN BY: BL
JOB NUMBER: 358037-V2
MATERIAL: SERIES 3200-T
CUSTOMER: FLEETWOOD WINDOWS AND DOORS
JOB NAME: AAMA TEST

FLEETWOOD WINDOWS AND DOORS
1 FLEETWOOD WAY CORONA, CALIFORNIA 92879 - www.fleetwoodusa.com

SCALE : NOT TO SCALE
DRAWING NO. : 4
SHEET : 4 OF 4

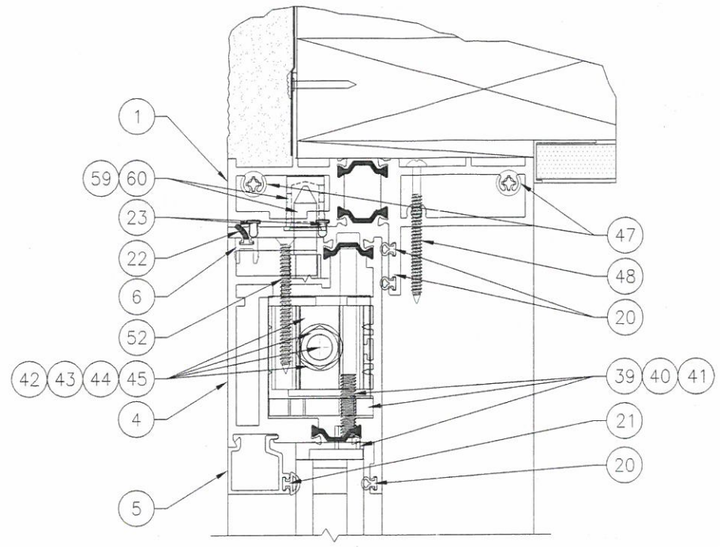

EXTERIOR

1 SERIES 3200-T OUT-SWING NAIL-ON HEAD
SCALE: FULL SIZE

FENESTRATION TESTING LAB
REPORT NO: T14-087
DATE: 12-31-14

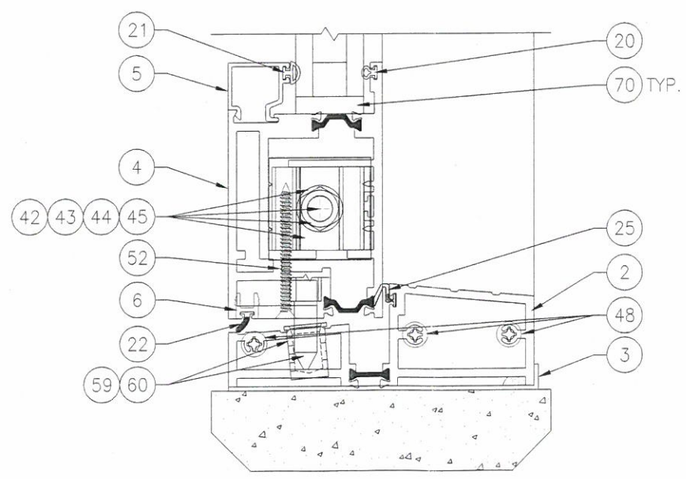

2 TAHOE 3200 OUT-SWING SILL
SCALE: FULL SIZE

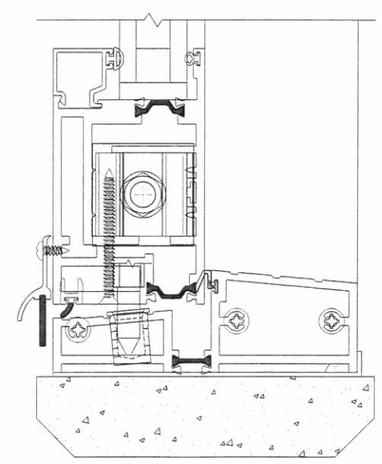

FOR HIGH WATER PERFORMANCE

2 TAHOE 3200 OUT-SWING SILL
SCALE: FULL SIZE

REVISIONS	DATE	DRAWN BY	COMMENTS

DRAWN BY: BL
DATE: 12/01/14
JOB NUMBER: 356037-V2

MATERIAL: SERIES 3200-T
CUSTOMER: FLEETWOOD WINDOWS AND DOORS
JOB NAME: AAMA TEST

FLEETWOOD WINDOWS AND DOORS
1 FLEETWOOD WAY CORONA, CALIFORNIA 92879 - www.fleetwoodusa.com

SCALE : NOT TO SCALE
DRAWING NO. : 2
SHEET : 2 OF 4

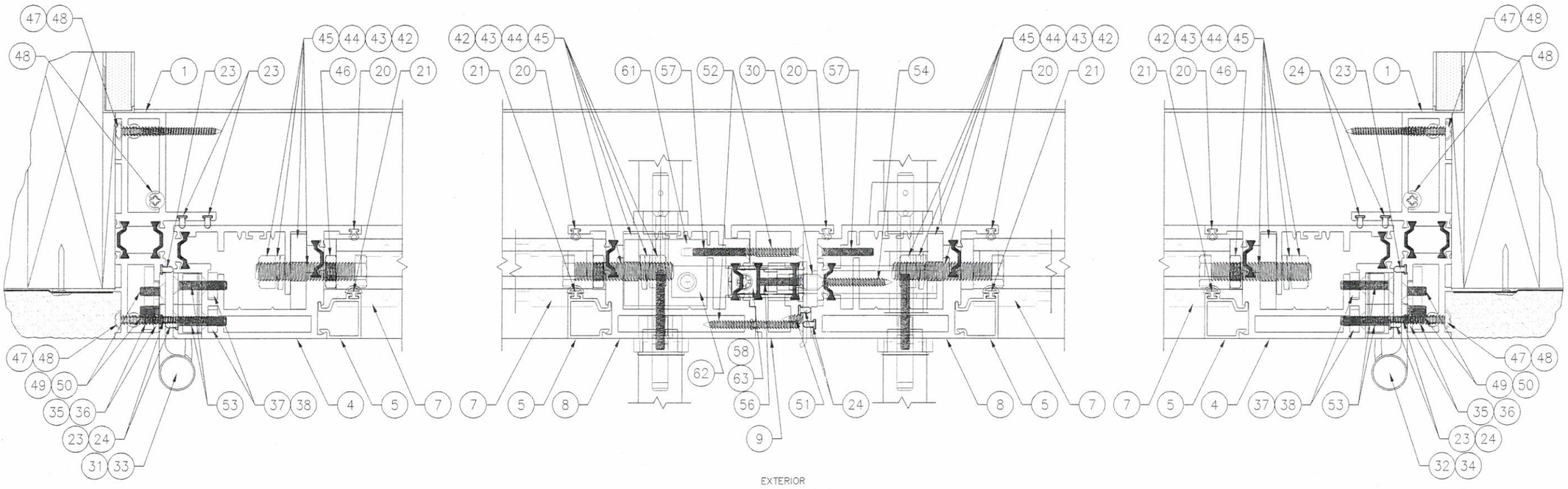

1 TAHOE 3200 OUT-SWING NAIL-ON JAMB @ HINGE
SCALE: FULL SIZE

2 TAHOE 3200 OUT-SWING MEETING STILES
SCALE: FULL SIZE

3 TAHOE 3200 OUT-SWING NAIL-ON JAMB @ HINGE
SCALE: FULL SIZE

FENESTRATION TESTING LAB
REPORT NO: T14-087
DATE: 12-31-14

REVISIONS	DATE	DRAWN BY	COMMENTS

DRAWN BY: BL
DATE: 12/01/14
JOB NUMBER: 358037-V2

MATERIAL: SERIES 3200-T
CUSTOMER: FLEETWOOD WINDOWS AND DOORS
JOB NAME: AAMA TEST

FLEETWOOD WINDOWS AND DOORS
1 FLEETWOOD WAY CORONA, CALIFORNIA 92879 - www.fleetwoodusa.com

SCALE : NOT TO SCALE
DRAWING NO. : 3
SHEET : 3 OF 4