3070–T CONCEPT WALL CONDITIONS_OPTION 1

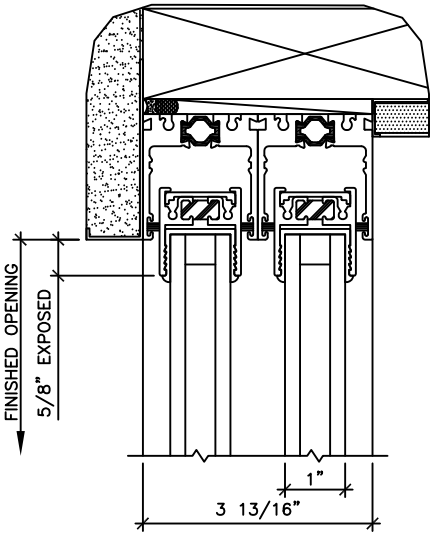

EXTERIOR

SERIES 3070–T HEAD

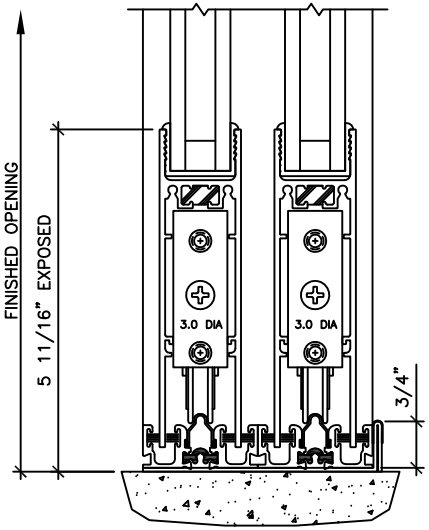

SERIES 3070–T SILL

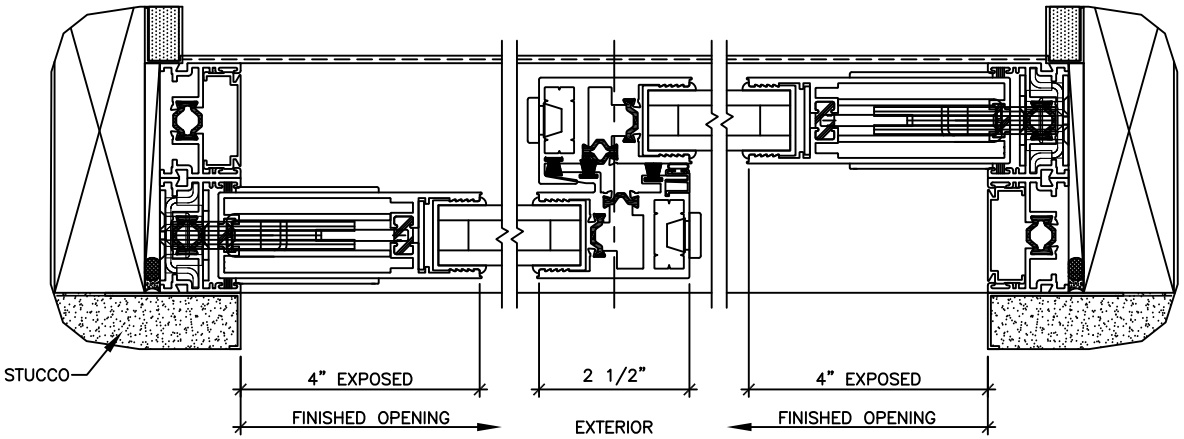

SERIES 3070–T LOCK JAMB

SERIES 3070–T INTERLOCKERS

SERIES 3070–T LOCK JAMB

REVISIONS	DATE	DRAWN BY	COMMENTS
REV-1	4/5/17	BL	ADDED HEADER

DRAWN BY: BL

DATE: 8/27/15

JOB NUMBER: NA

MATERIAL: SERIES 3070-T

CUSTOMER: FLEETWOOD WINDOWS AND DOORS

JOB NAME: STUCCO SURROUND R & D_OPTION 1

FLEETWOOD WINDOWS & DOORS
1 FLEETWOOD WAY
CORONA, CA 92879
www.fleetwoodusa.com

SCALE: 1' = 1'

DRAWING NO.: 1.01

SHEET: 1 OF 1